0 601 613 034
Issue Stand } 06-06-07
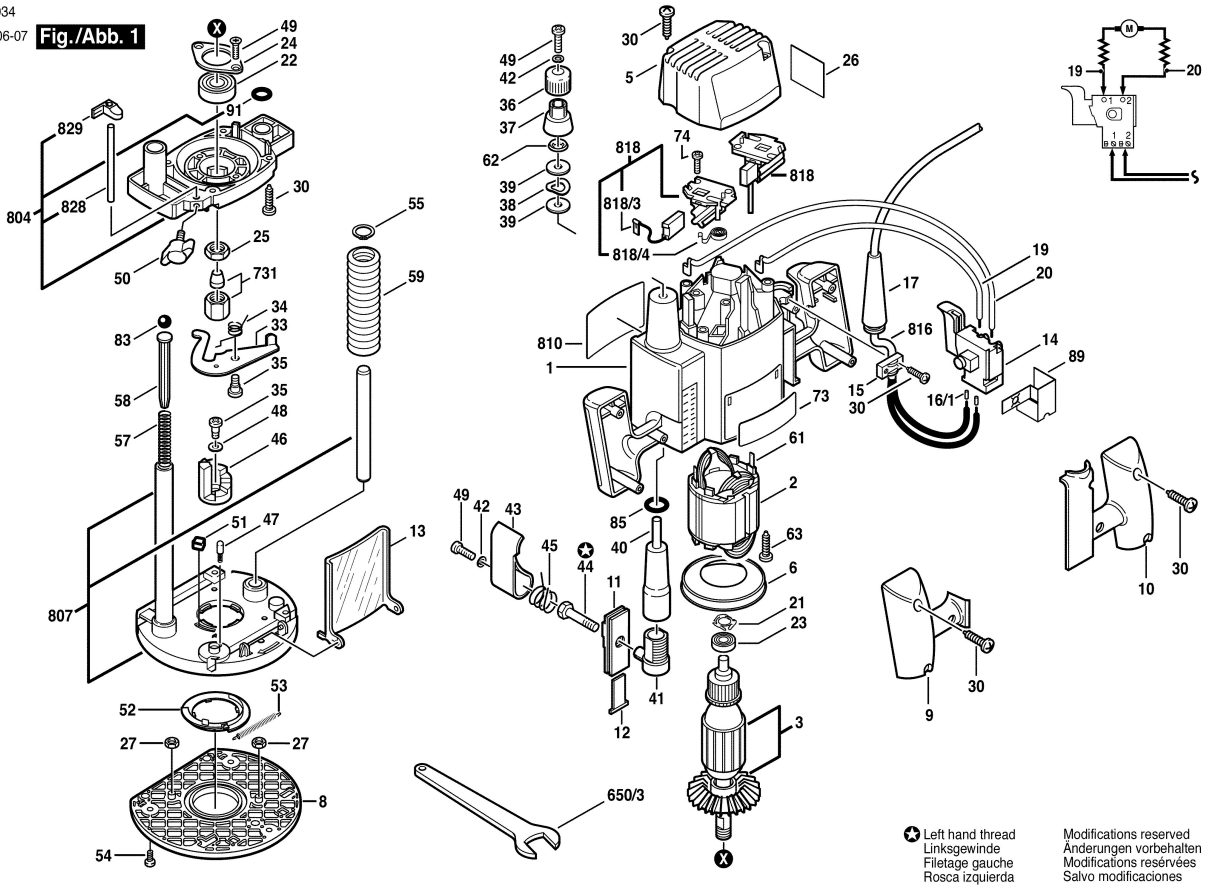
Fig./Abb. 1