0 601 613 660
Issue Stand 06-12-21
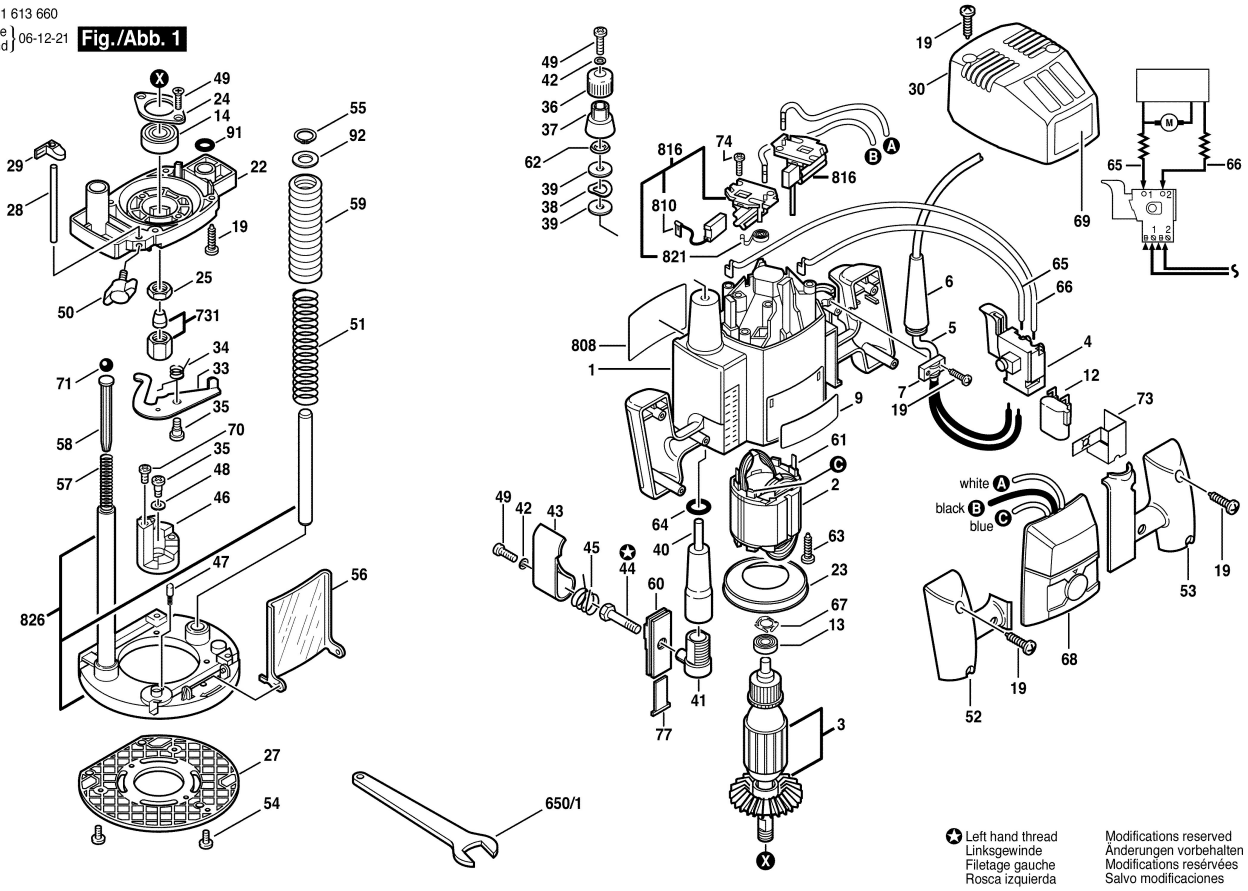
Fig./Abb. 1