0 601 614 103

Issue / Stand } 01-03-16
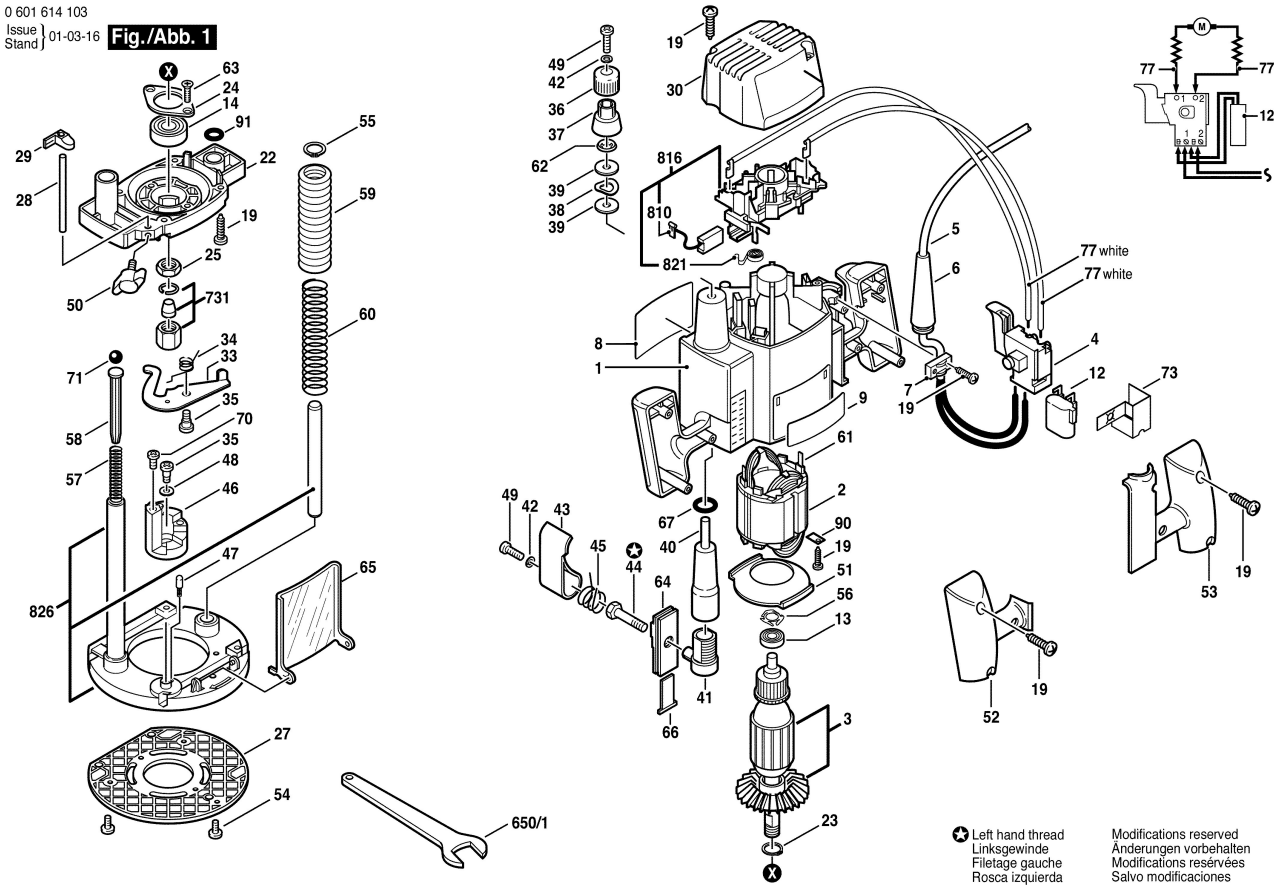
Fig./Abb. 1