0 601 614 734
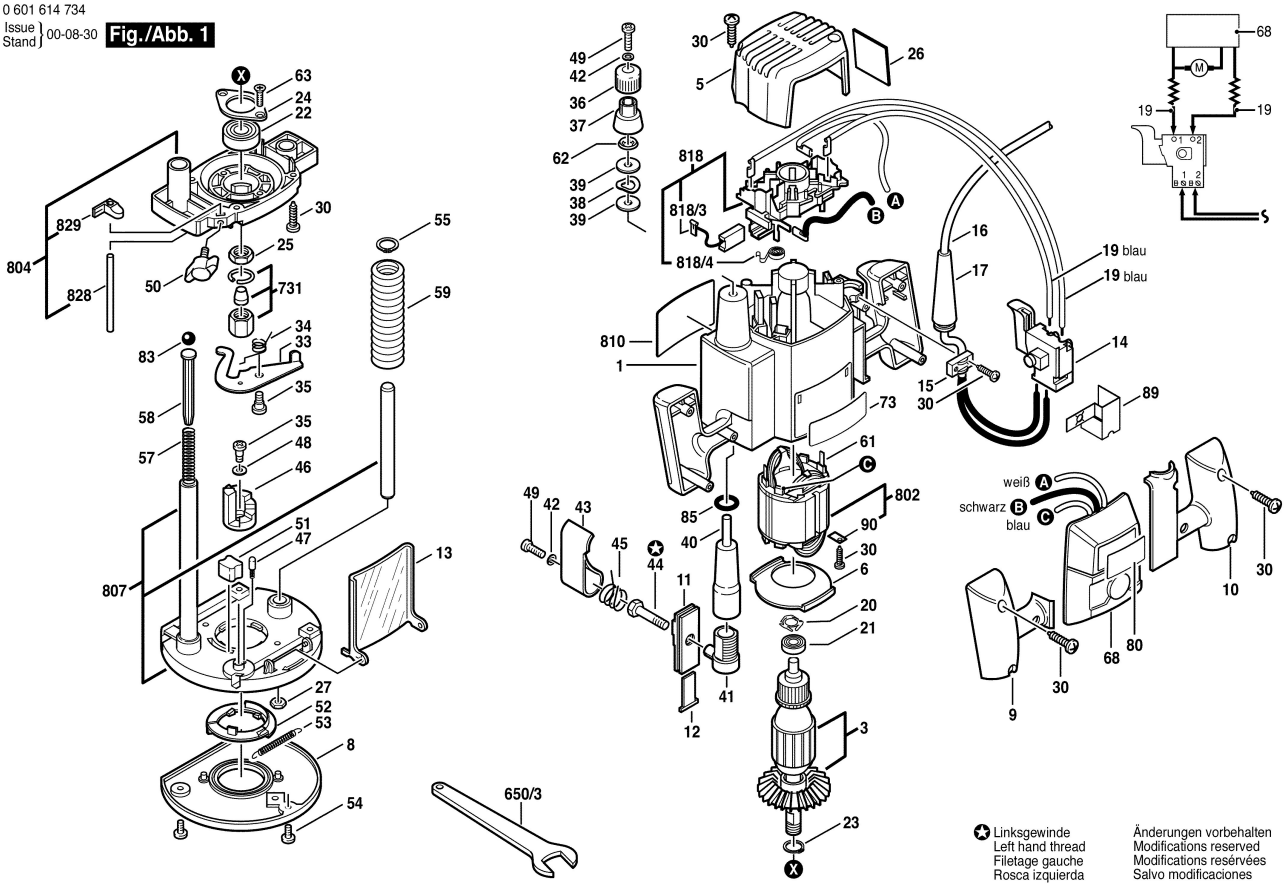
Issue / Stand } 00-08-30 **Fig./Abb. 1**