0 601 637 003
Issue Stand 06-02-06
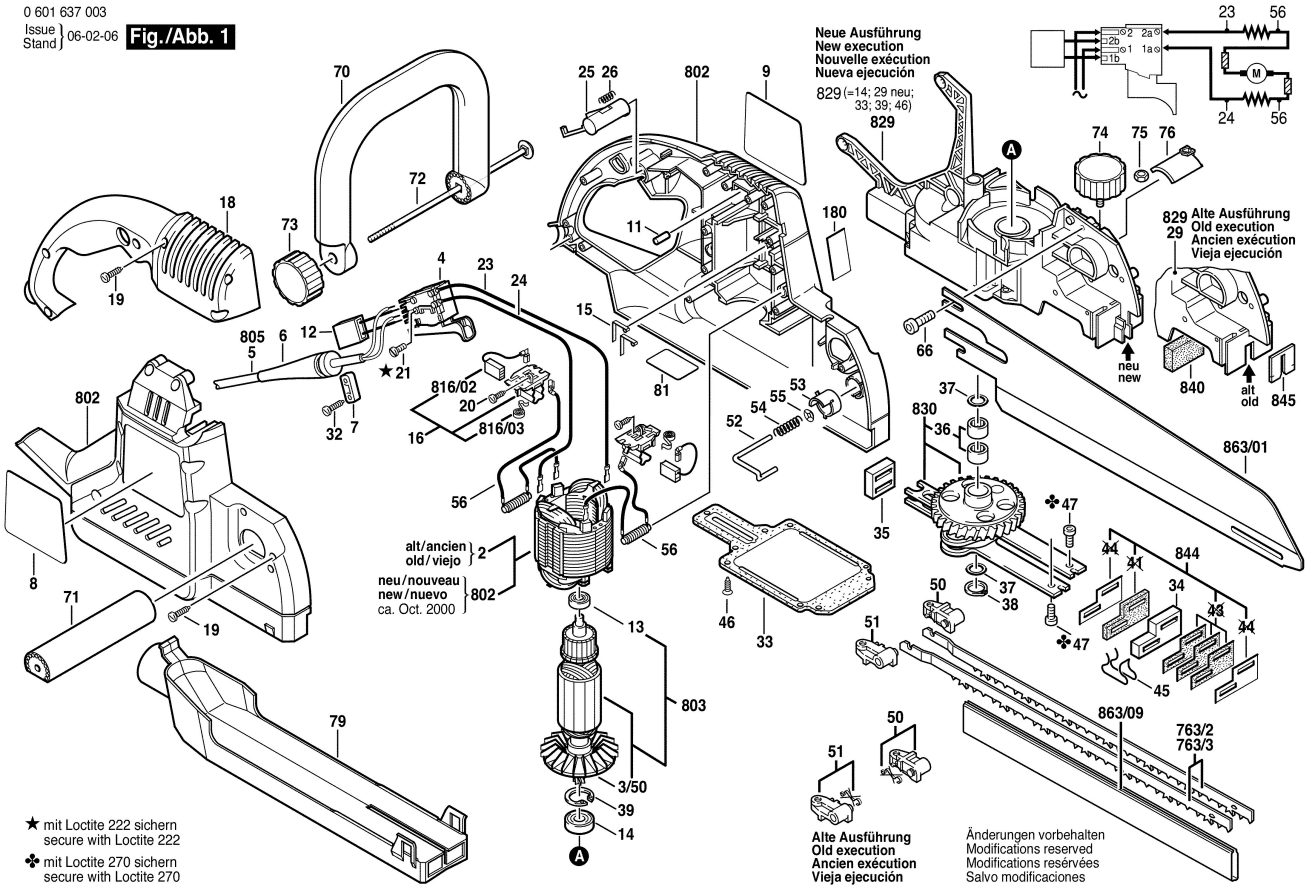
Fig./Abb. 1