7 1/4" CIRCULAR SAW 1654

(Stand 08/92)

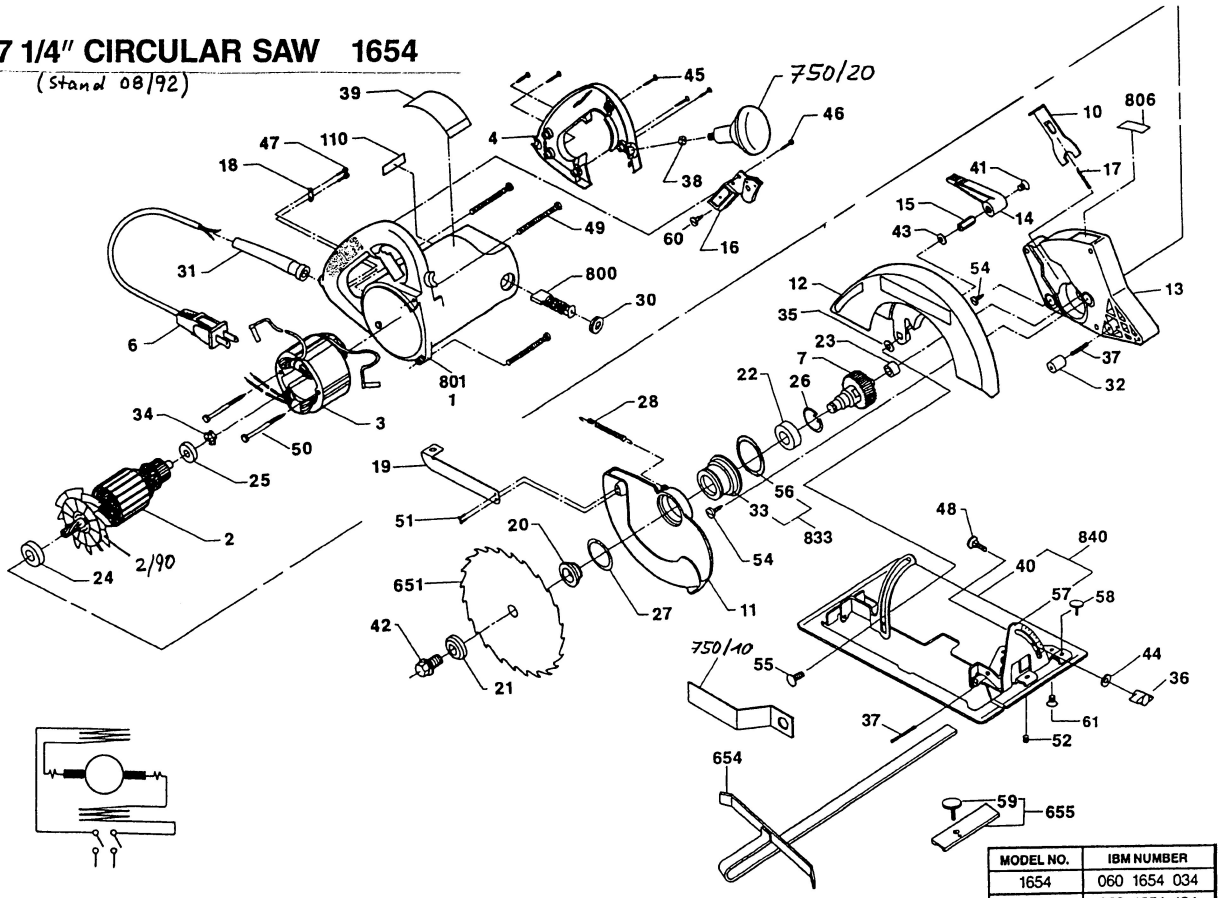

MODEL NO.	IBM NUMBER
1654	060 1654 034
1654	060 1654 134