0 601 674 039
Issue } ~~07-01~~
Stand } 07-11-15

Fig./Abb. 1

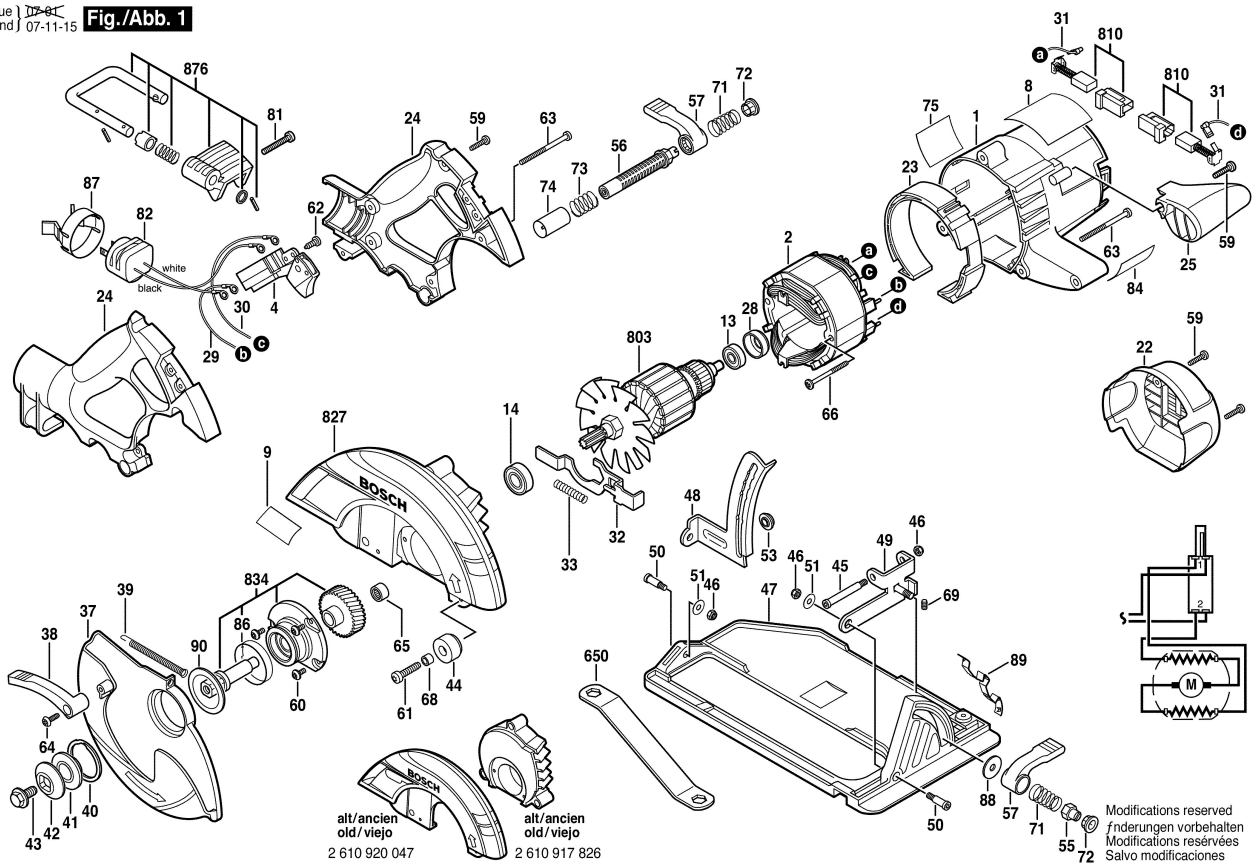

Modifications reserved
Änderungen vorbehalten
Modifications reservées
Salvo modificaciones