0 601 754 861
Stand ~~02-02~~
Issue 02-03-11

Fig./Abb. 1

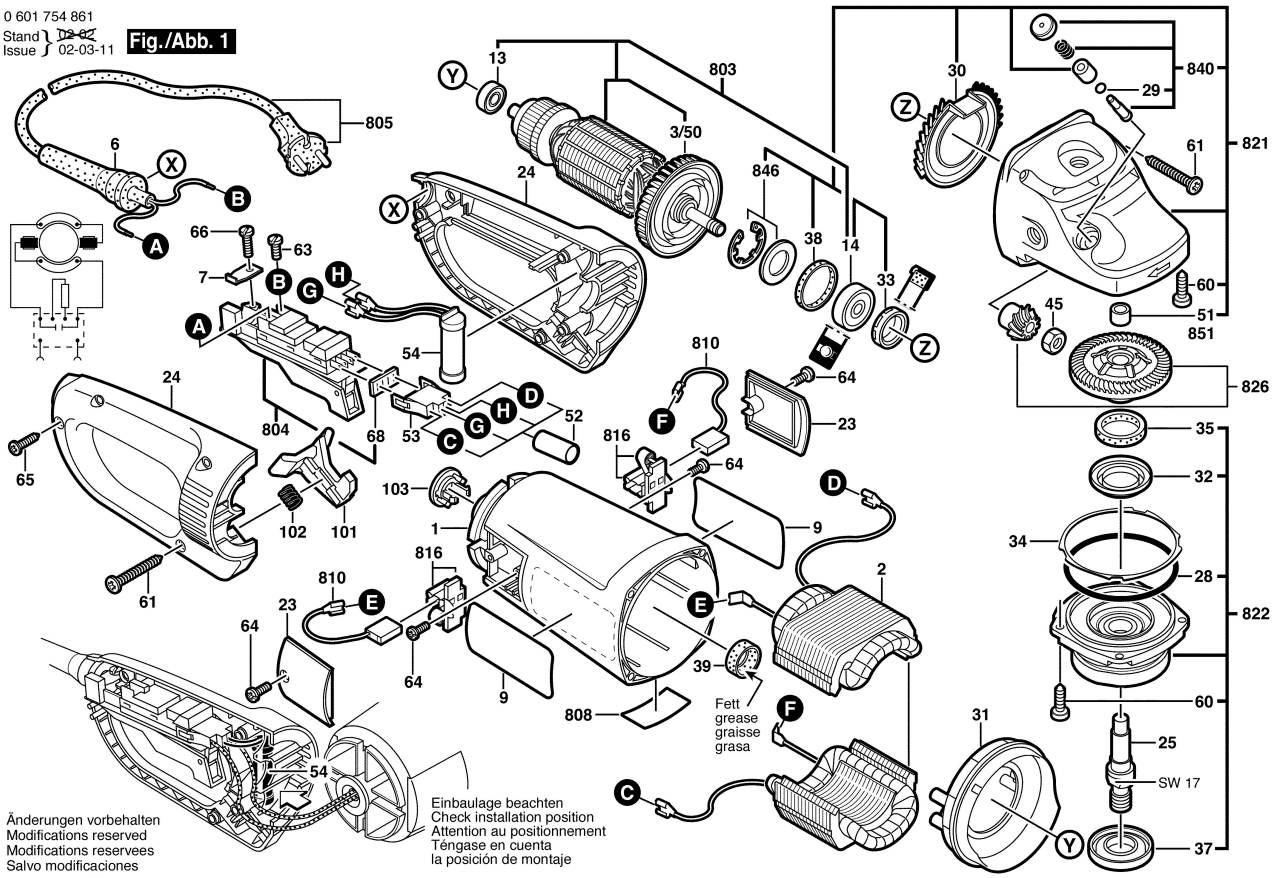

0 601 754 861
Stand ~~02-02~~
Issue 02-03-11

Fig./Abb. 2

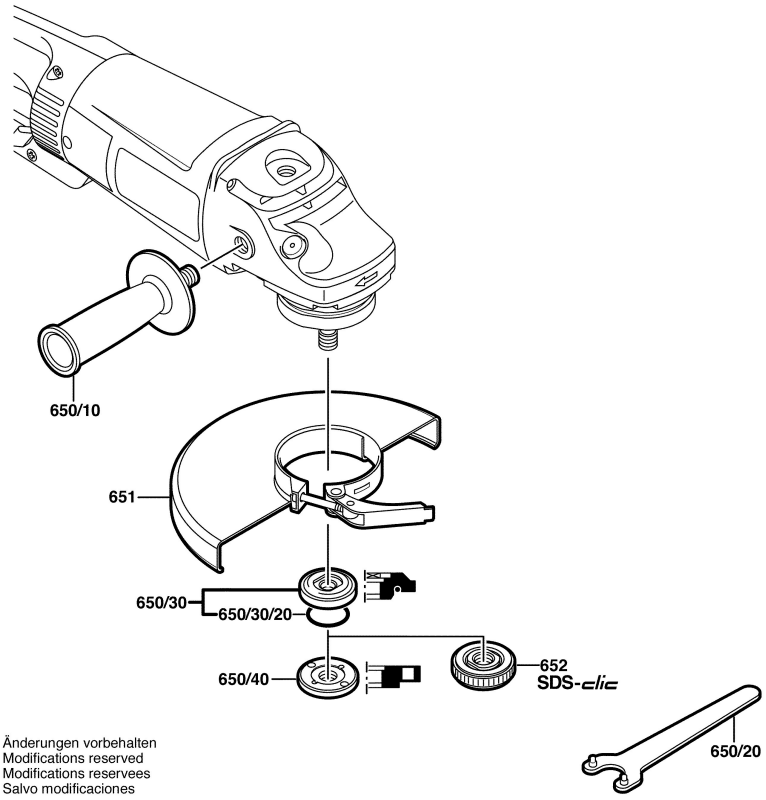

Änderungen vorbehalten
Modifications reserved
Modifications reservees
Salvo modificaciones