0 601 850 1A7
Stand } ~~05-06~~
Issue } 08-06-20

Fig./Abb. 1

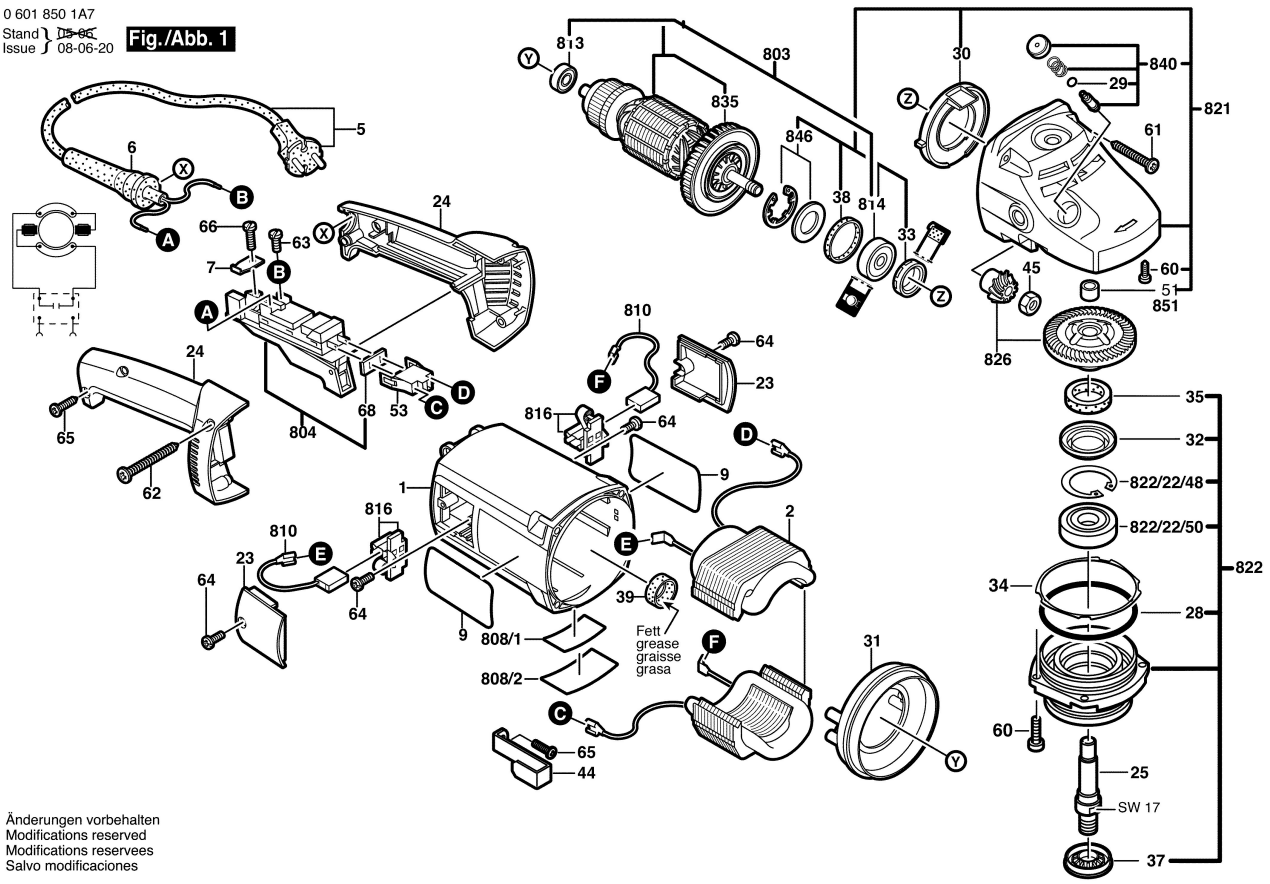

Änderungen vorbehalten
Modifications reserved
Modifications reservees
Salvo modificaciones

0 601 850 1A7
Stand } ~~05-06-13~~
Issue } 05-06-22

Fig./Abb. 2

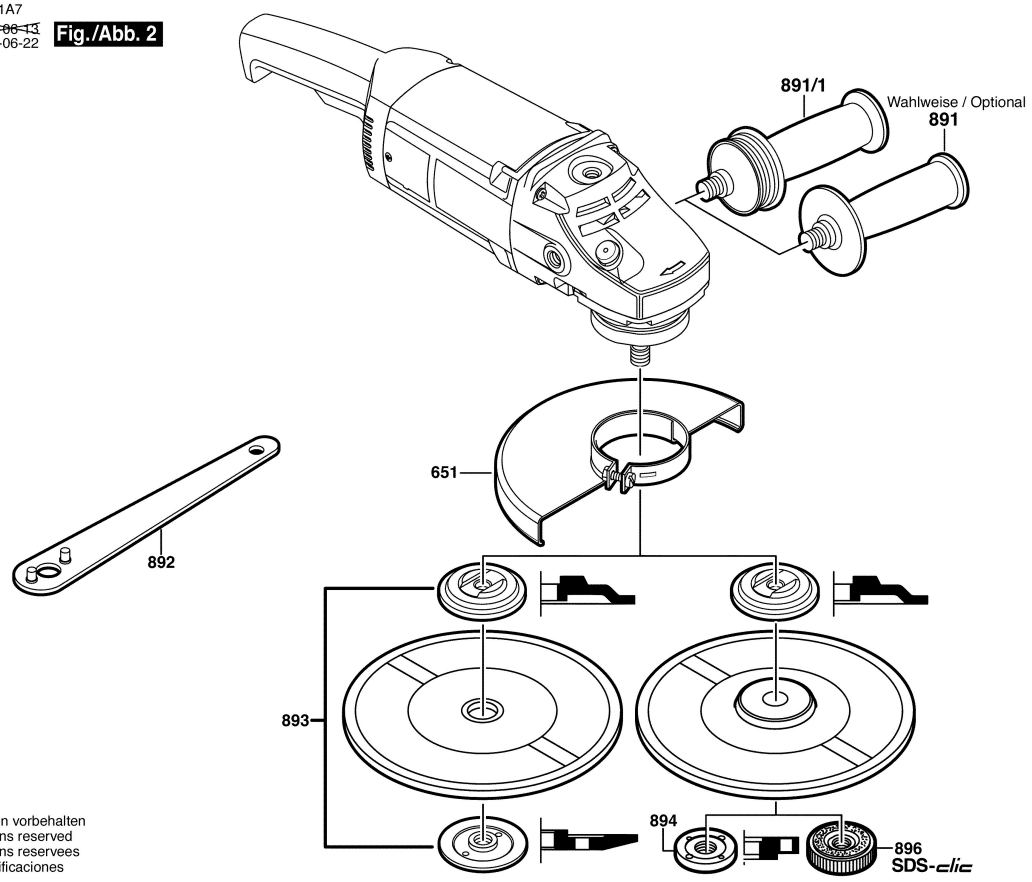

Änderungen vorbehalten
Modifications reserved
Modifications reservees
Salvo modificaciones