0 601 863 873
Stand ~~D2-07~~
Issue 08-12-05

Fig./Abb. 1

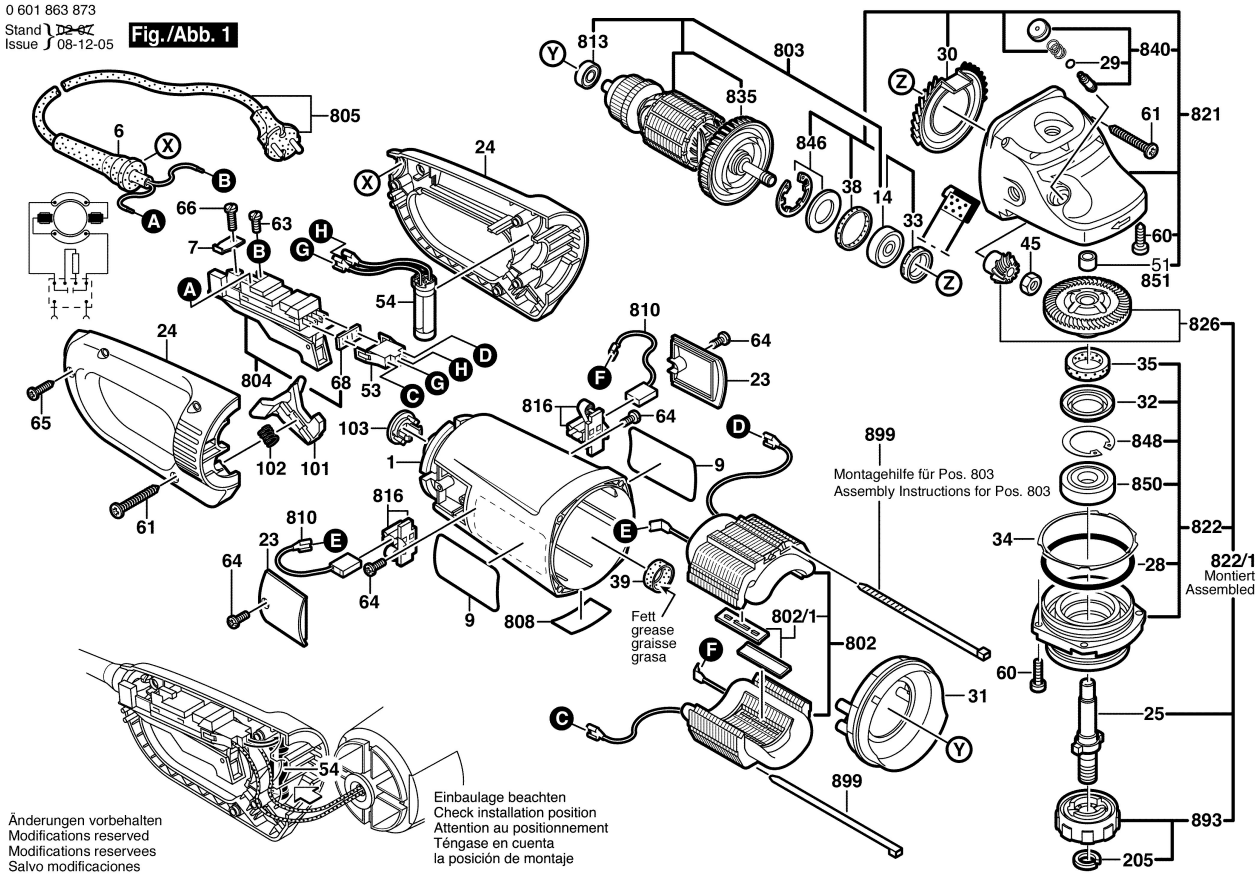

0 601 863 873
Stand ~~D2-07~~
Issue 07-12-11

Fig./Abb. 2

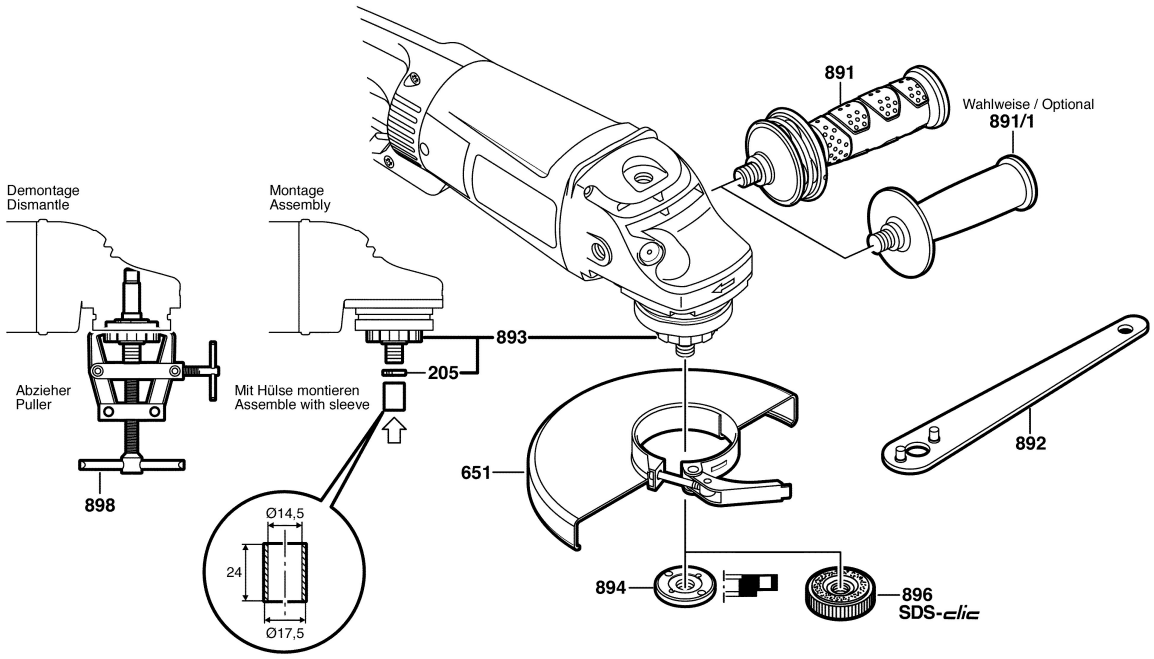

Änderungen vorbehalten
Modifications reserved
Modifications reservees
Salvo modificaciones