0 603 238 403 /803
Stand ~~08-10~~
Issue 08-04-14
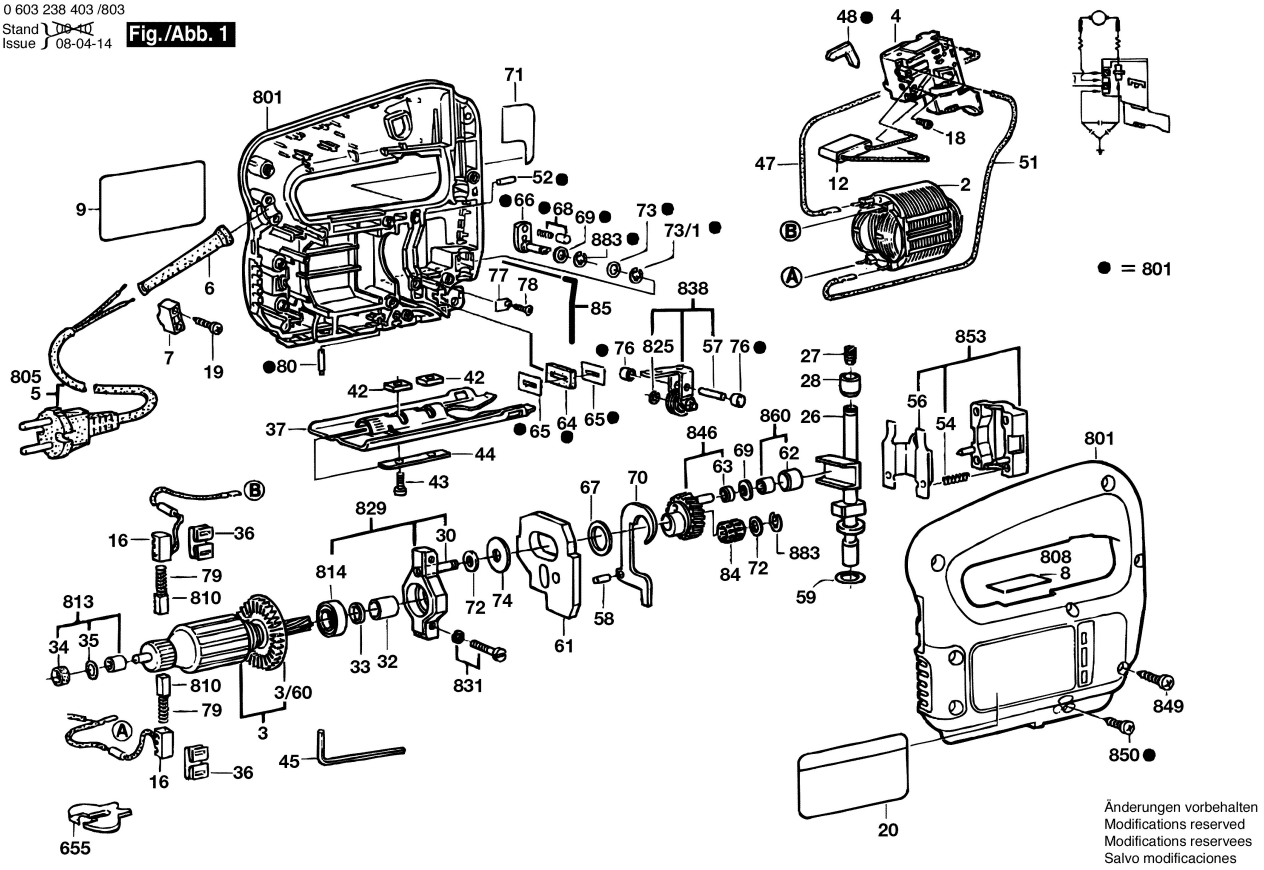
Fig./Abb. 1