0 603 238 903
Stand ~~08-02~~
Issue 08-04-14
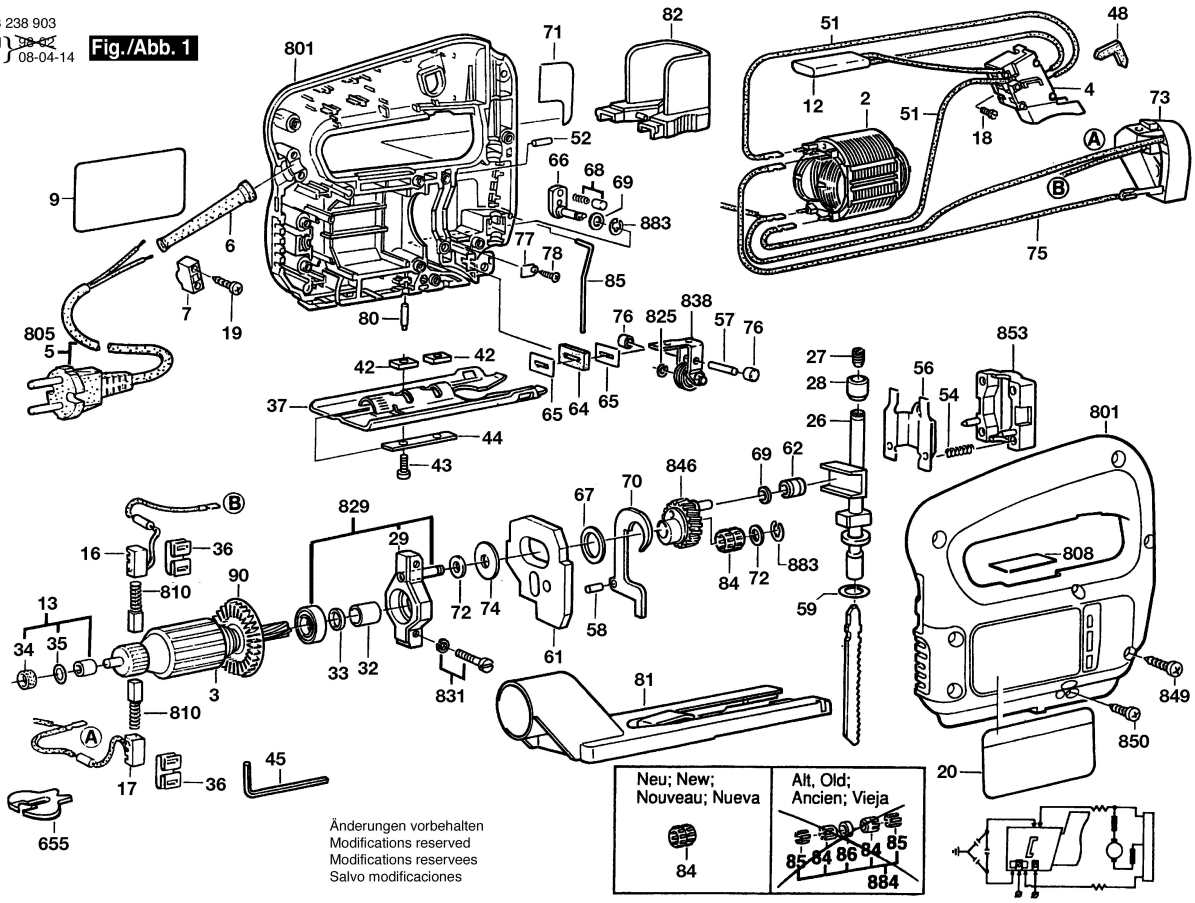
Fig./Abb. 1