0 603 248 703
Stand ~~99-02~~
Issue 99-05-11
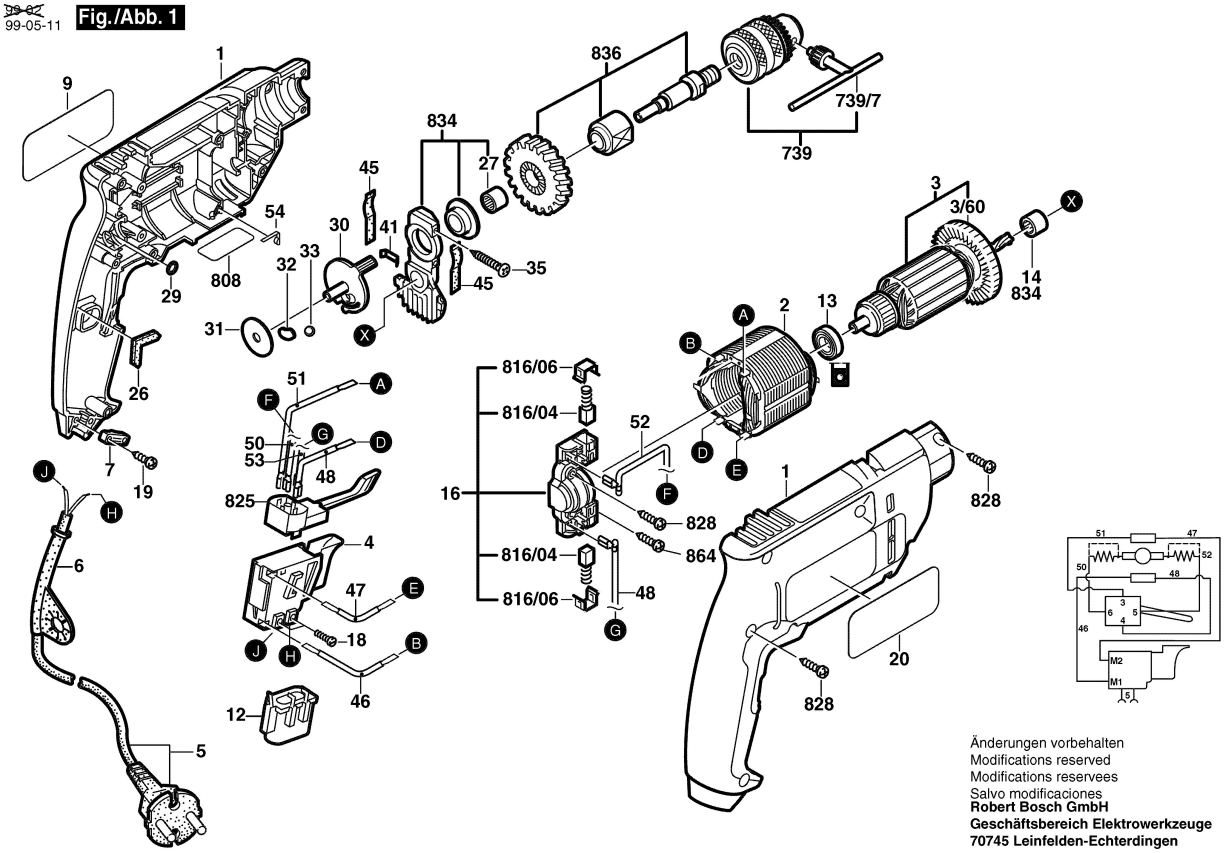
Fig./Abb. 1