Typ 0 603 259 2 . . = **PHO 30 - 82**
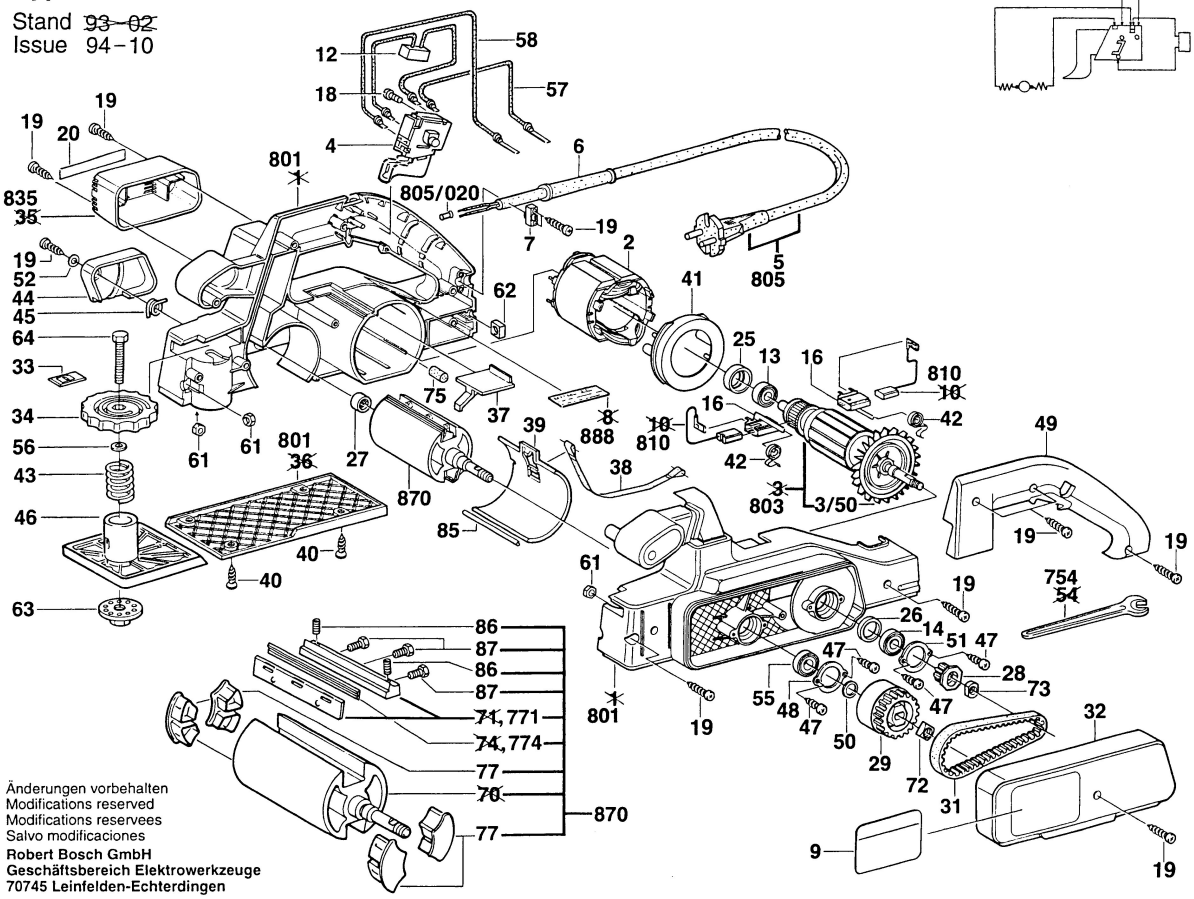
Stand ~~93-02~~
Issue 94-10