0 603 272 161

Stand } ~~97-10~~
Issue } 99-07-19

Fig./Abb. 1

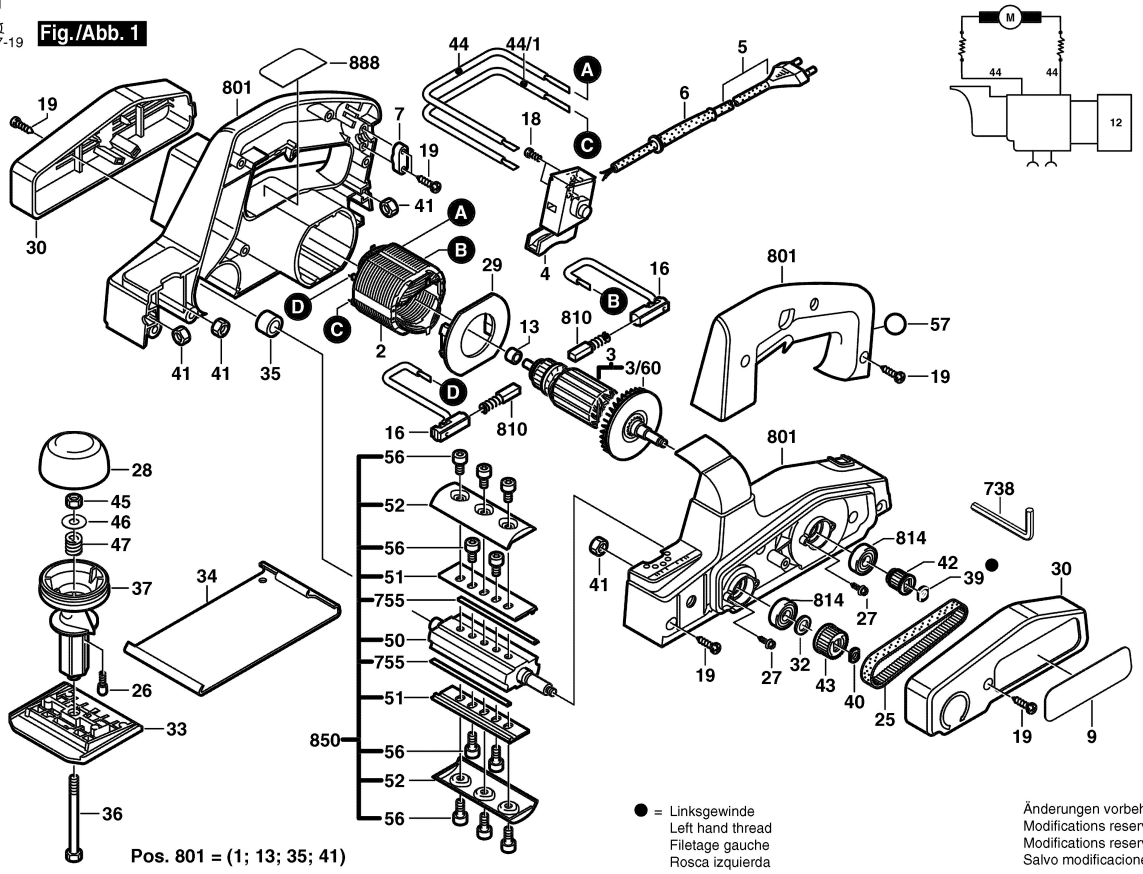

Pos. 801 = (1; 13; 35; 41)