0 603 295 703
Issue / Stand 06-10-25

Fig./Abb. 1

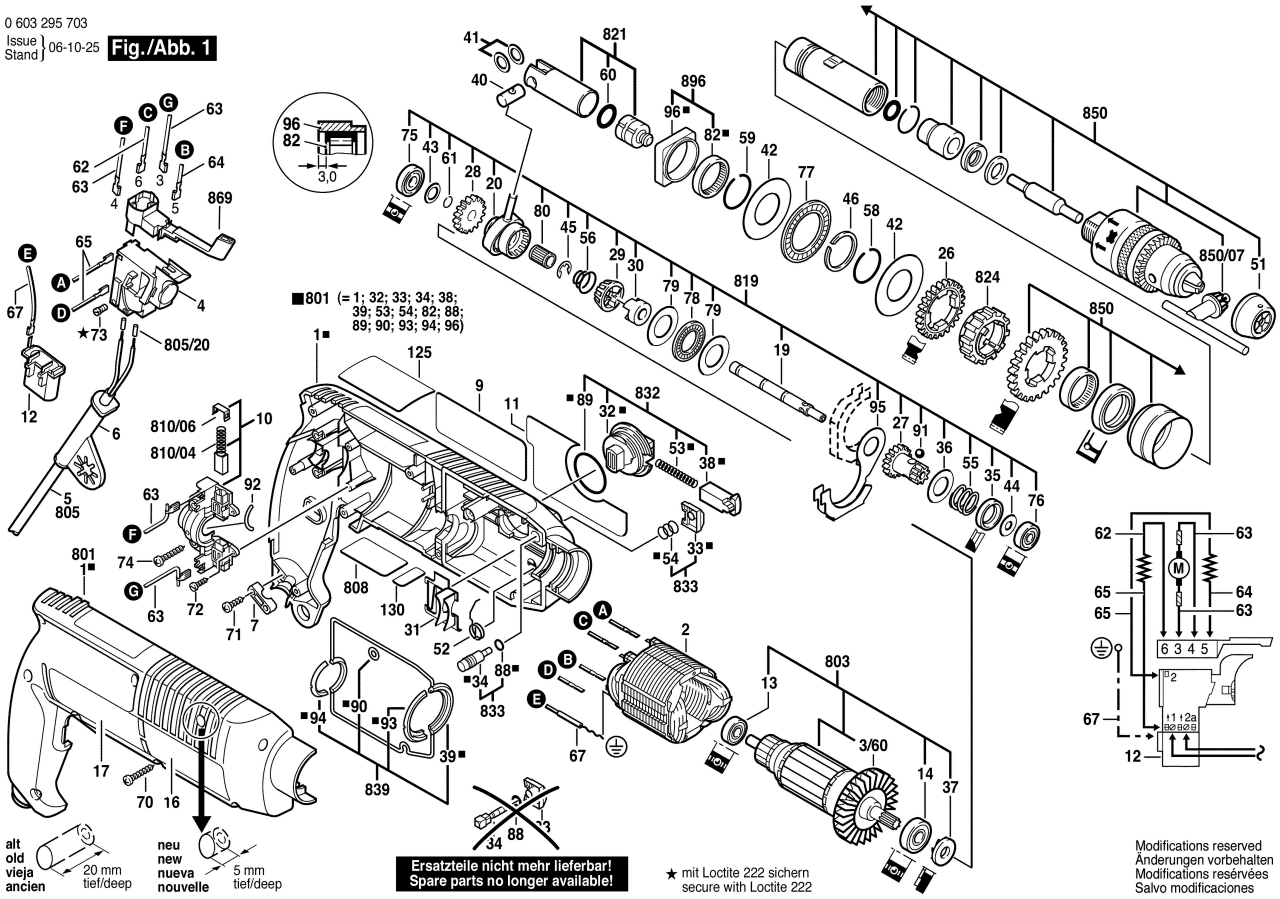

0 603 295 703
Issue / Stand 06-10-25
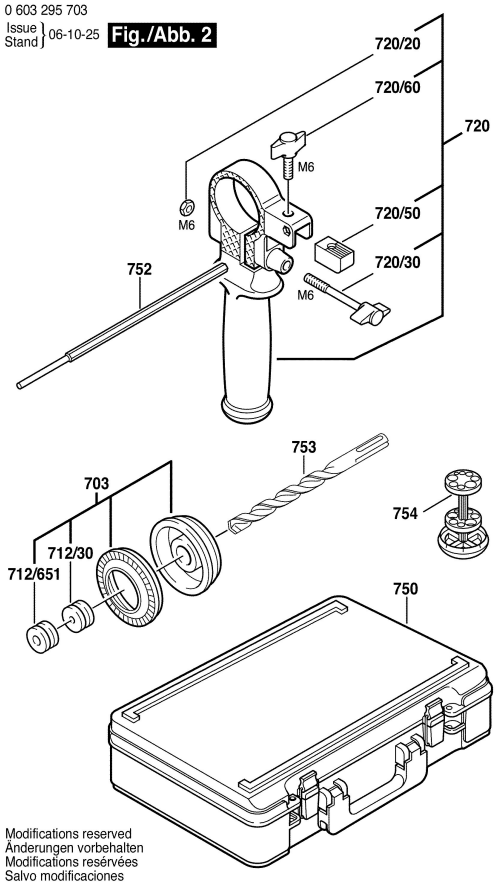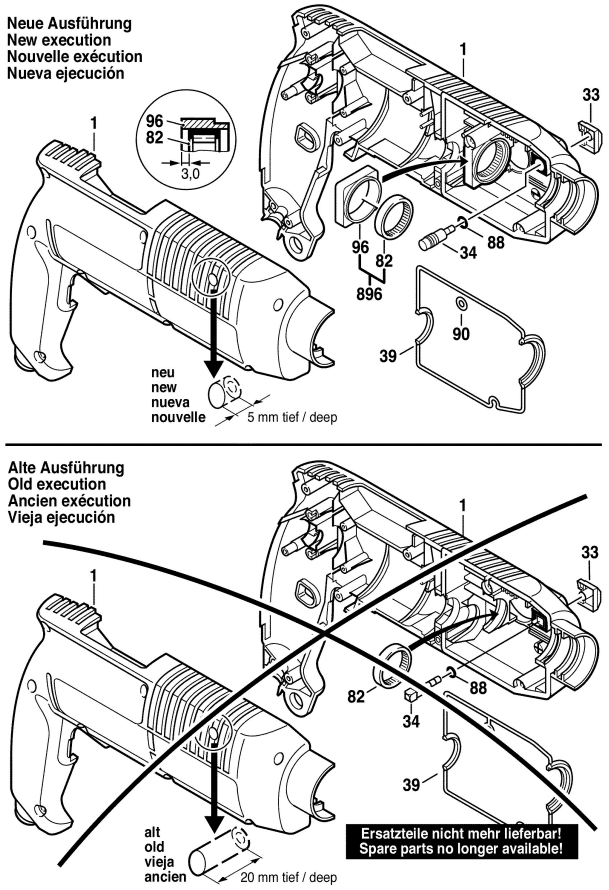
Fig./Abb. 2