0 603 298 703
Stand ~~94-11~~
Issue 98-11-12
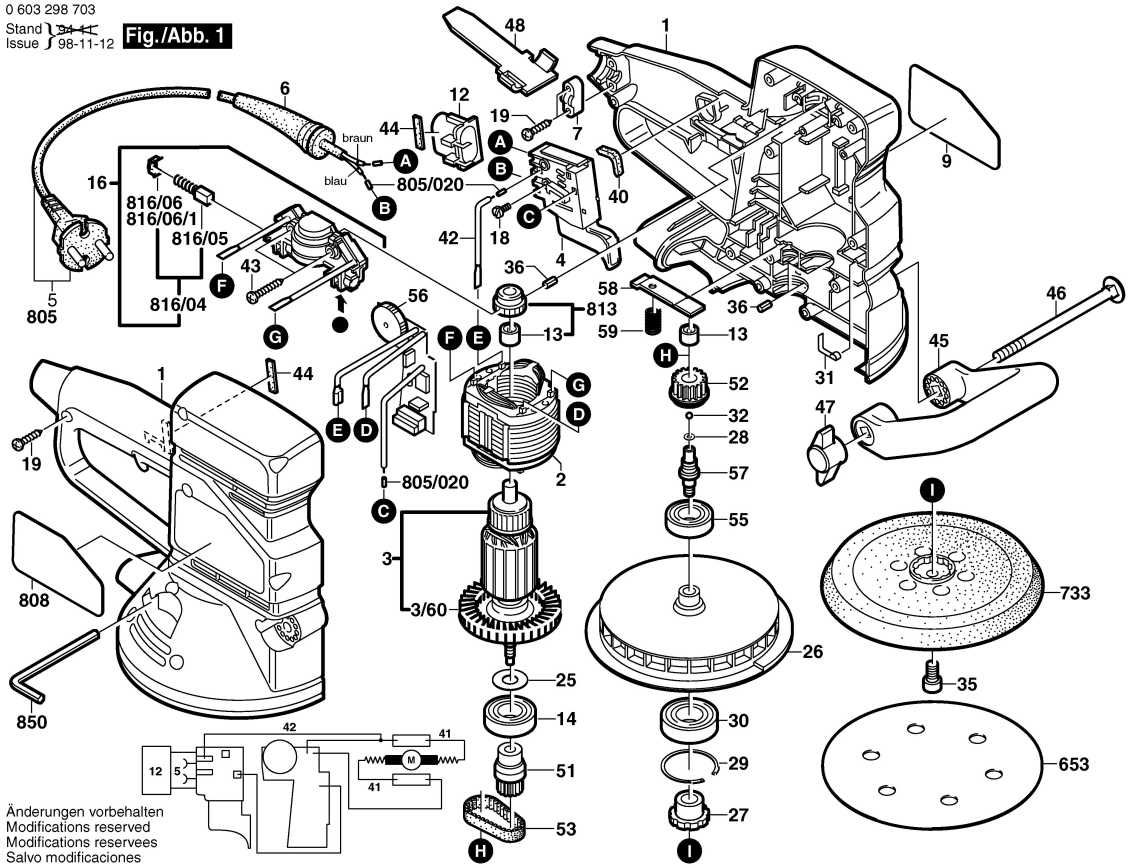
Fig./Abb. 1