0 603 303 735
Stand 98-11
Issue 98-09-28
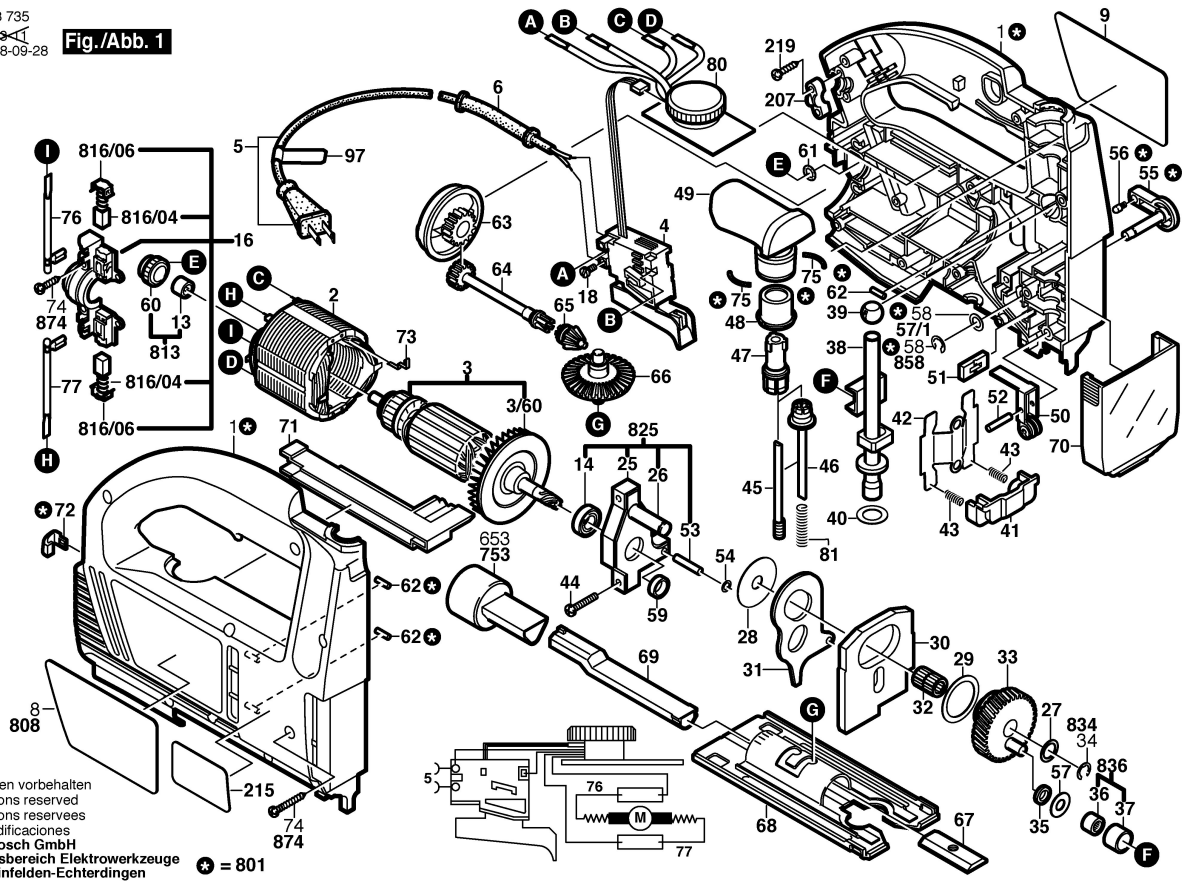
Fig./Abb. 1