0 603 308 745
Issue / Stand } 06-10-31
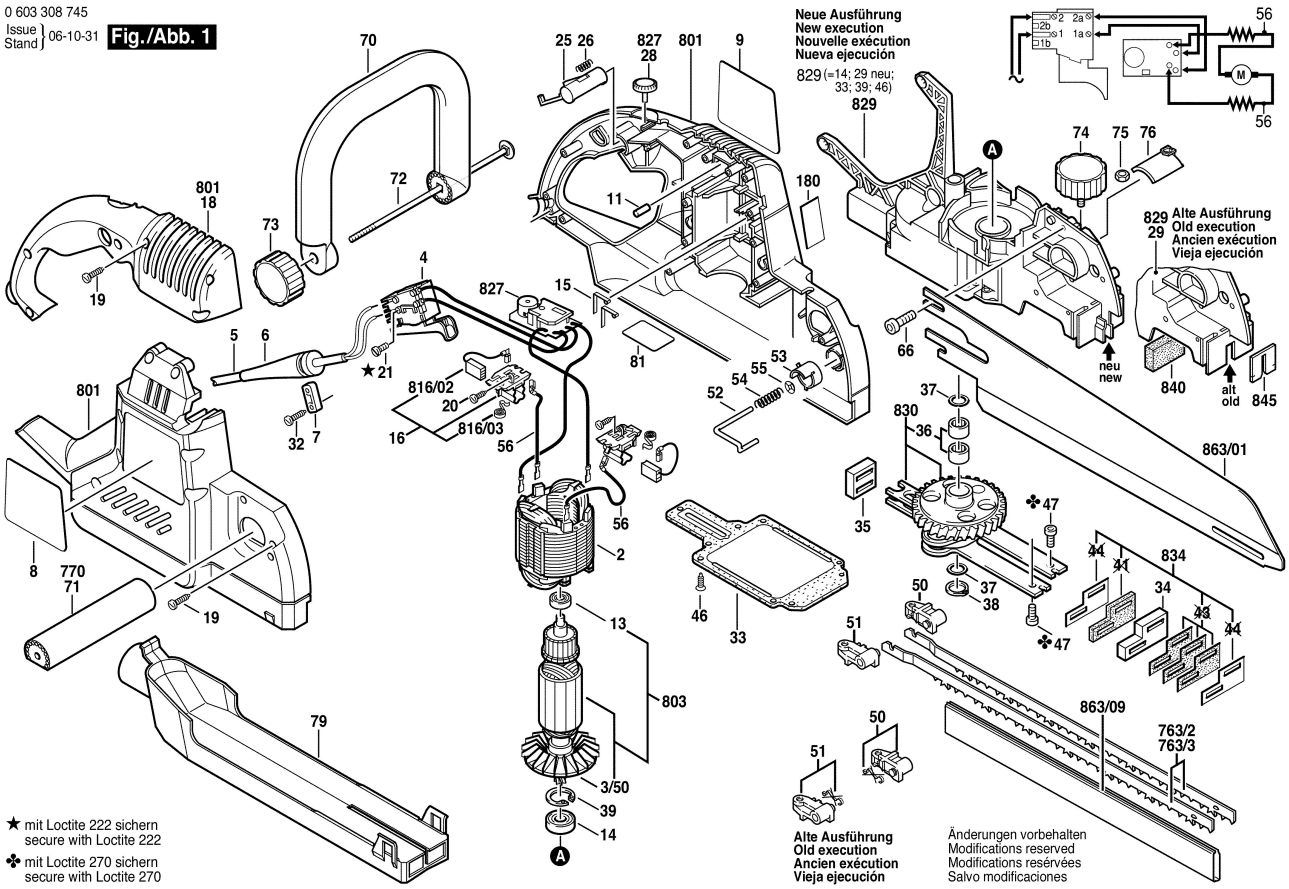
Fig./Abb. 1