0 603 327 703; 739; 761

Issue / Stand 13-09-12
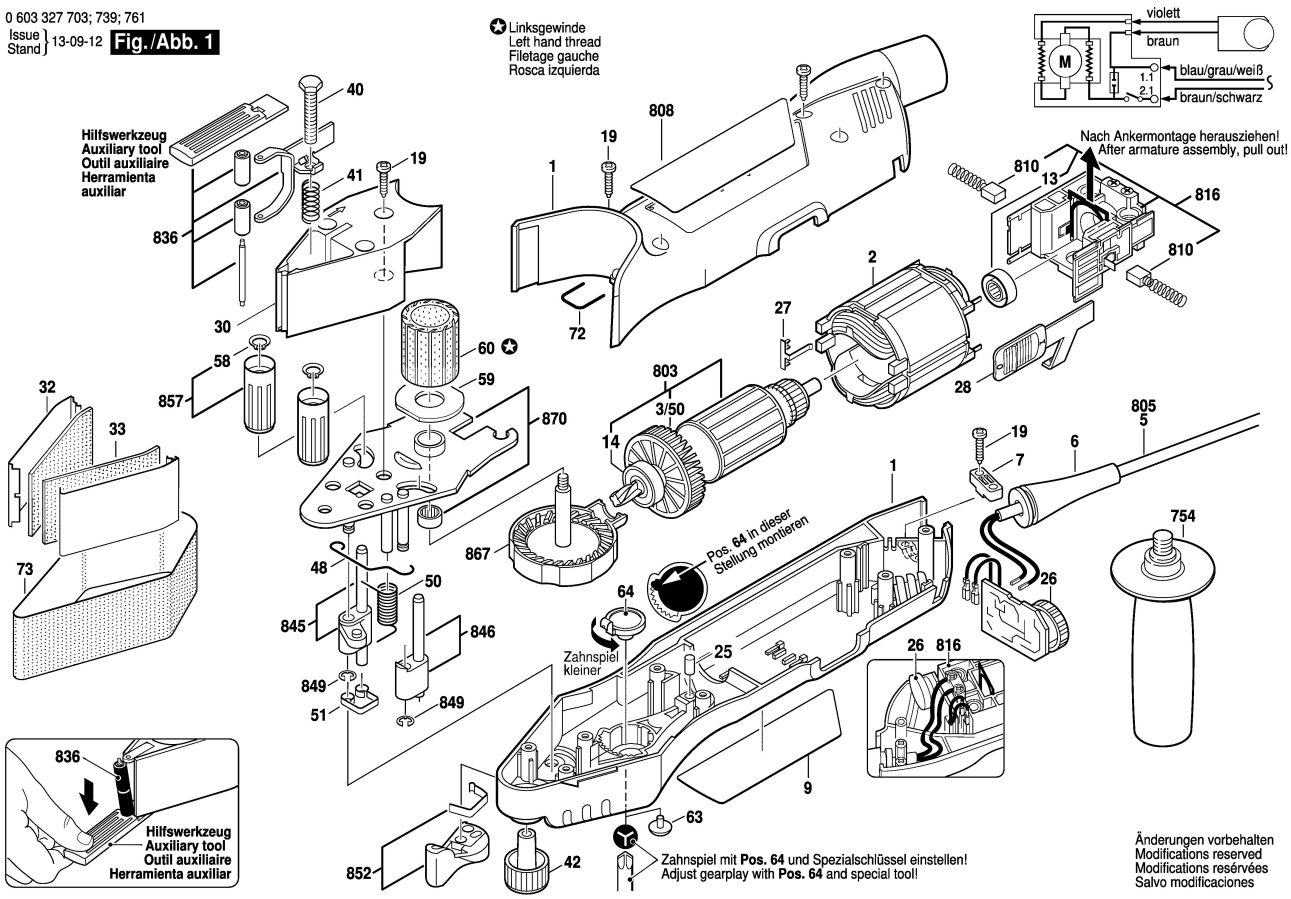
Fig./Abb. 1