0 603 335 703
Stand ~~35-1~~
Issue 08-04-14

Fig./Abb. 1

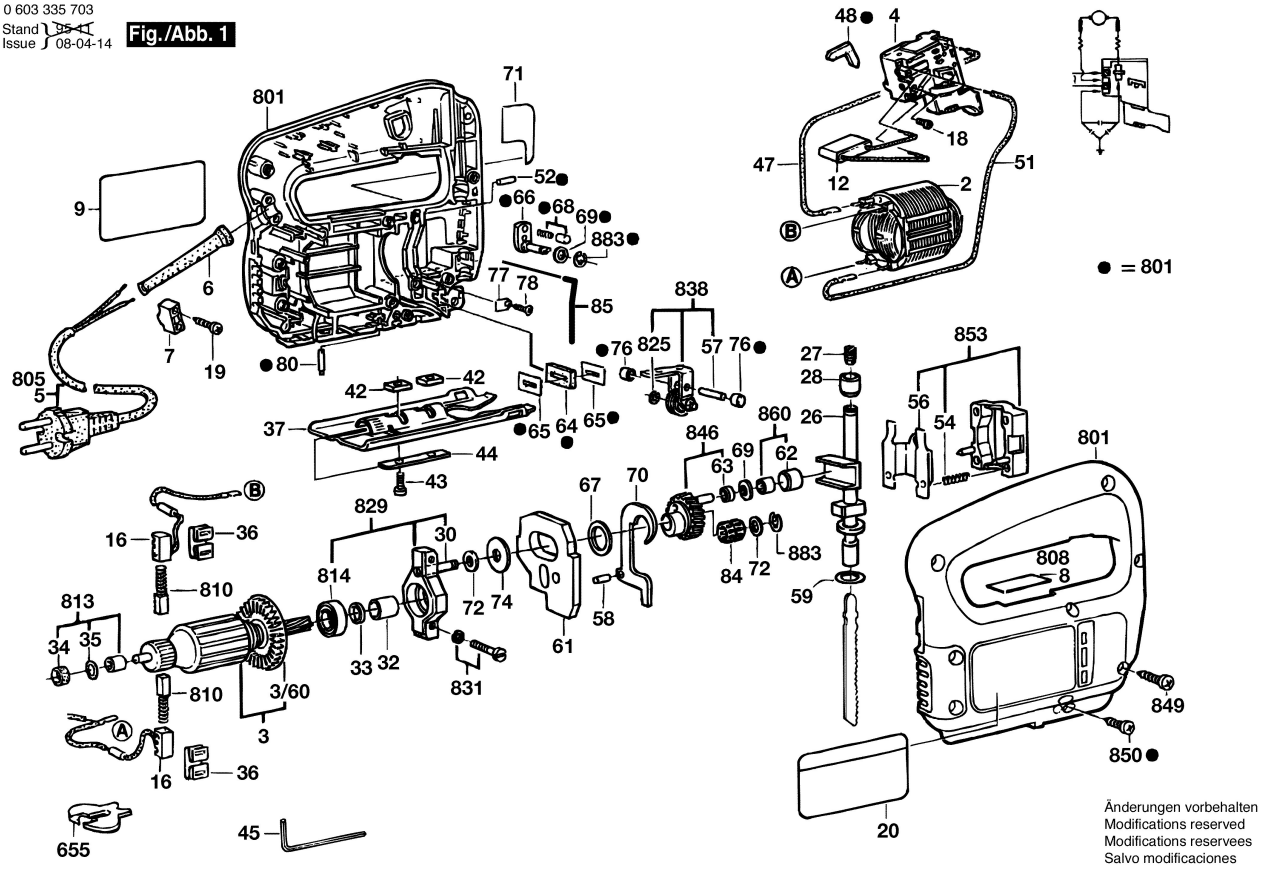

Änderungen vorbehalten
Modifications reserved
Modifications reservees
Salvo modificaciones