0 603 335 803
Stand ~~98-02~~
Issue 08-04-15

Fig./Abb. 1

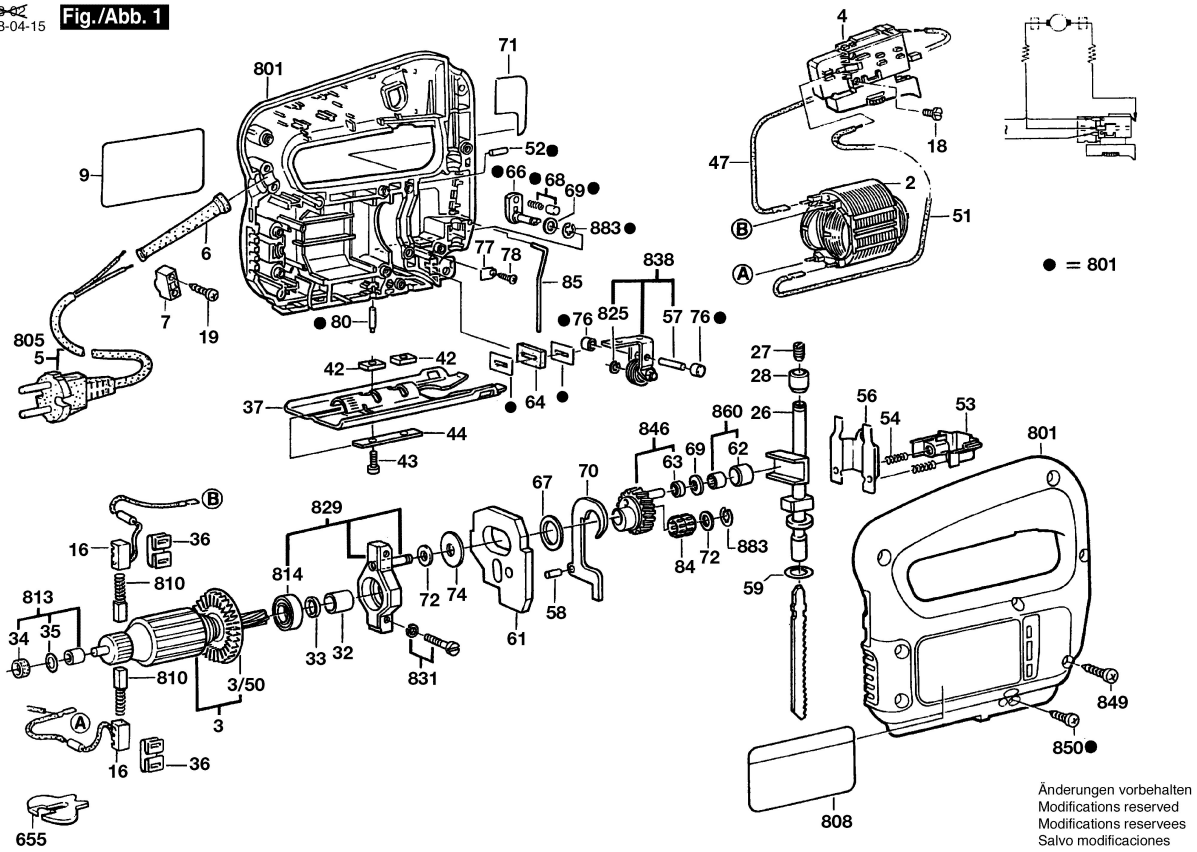

Änderungen vorbehalten
Modifications reserved
Modifications reservees
Salvo modificaciones