0 603 338 503

Stand ~~99-01~~
Issue 01-02-16

Fig./Abb. 1

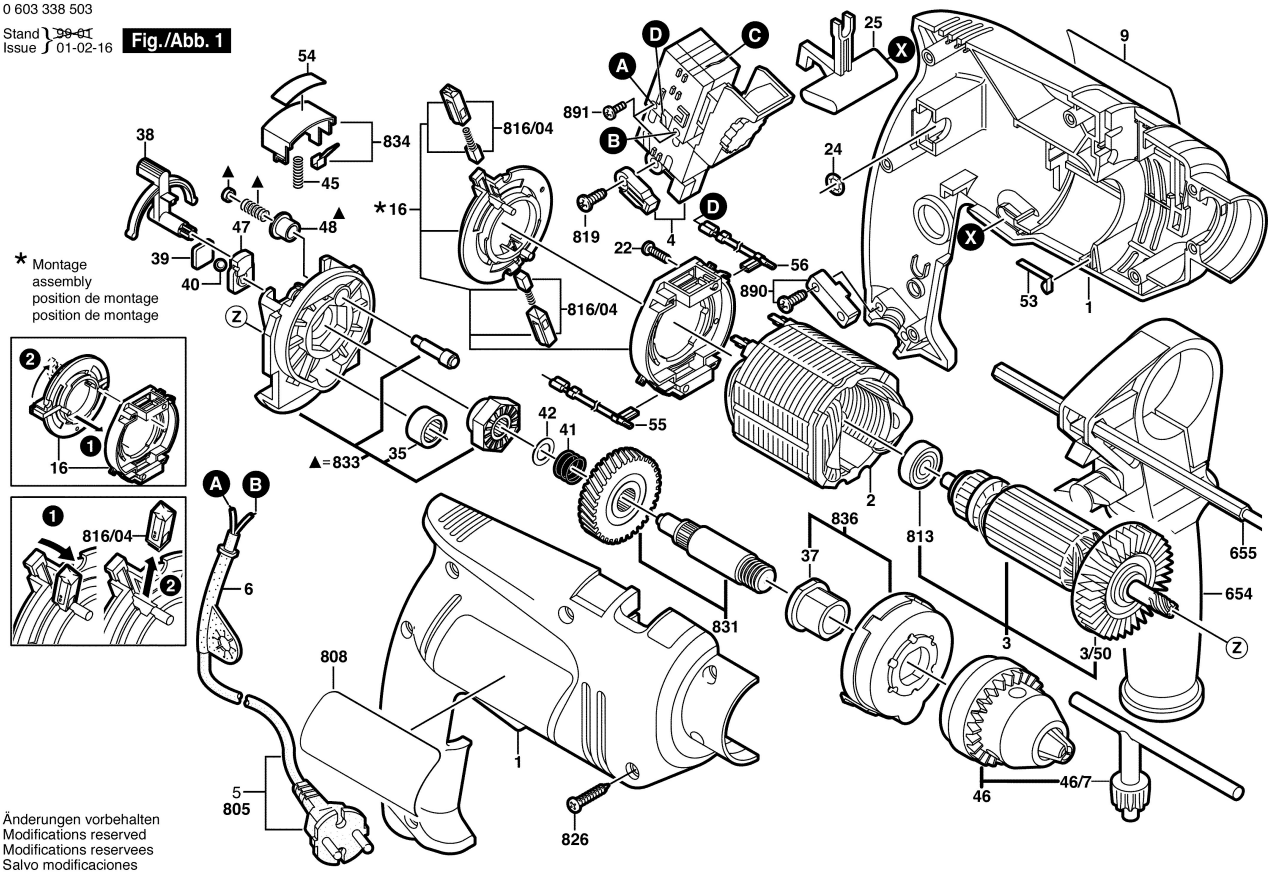

Änderungen vorbehalten
Modifications reserved
Modifications reservees
Salvo modificaciones