0 603 363 003

Stand } ~~08-05~~
Issue } 01-08-02

Fig./Abb. 1

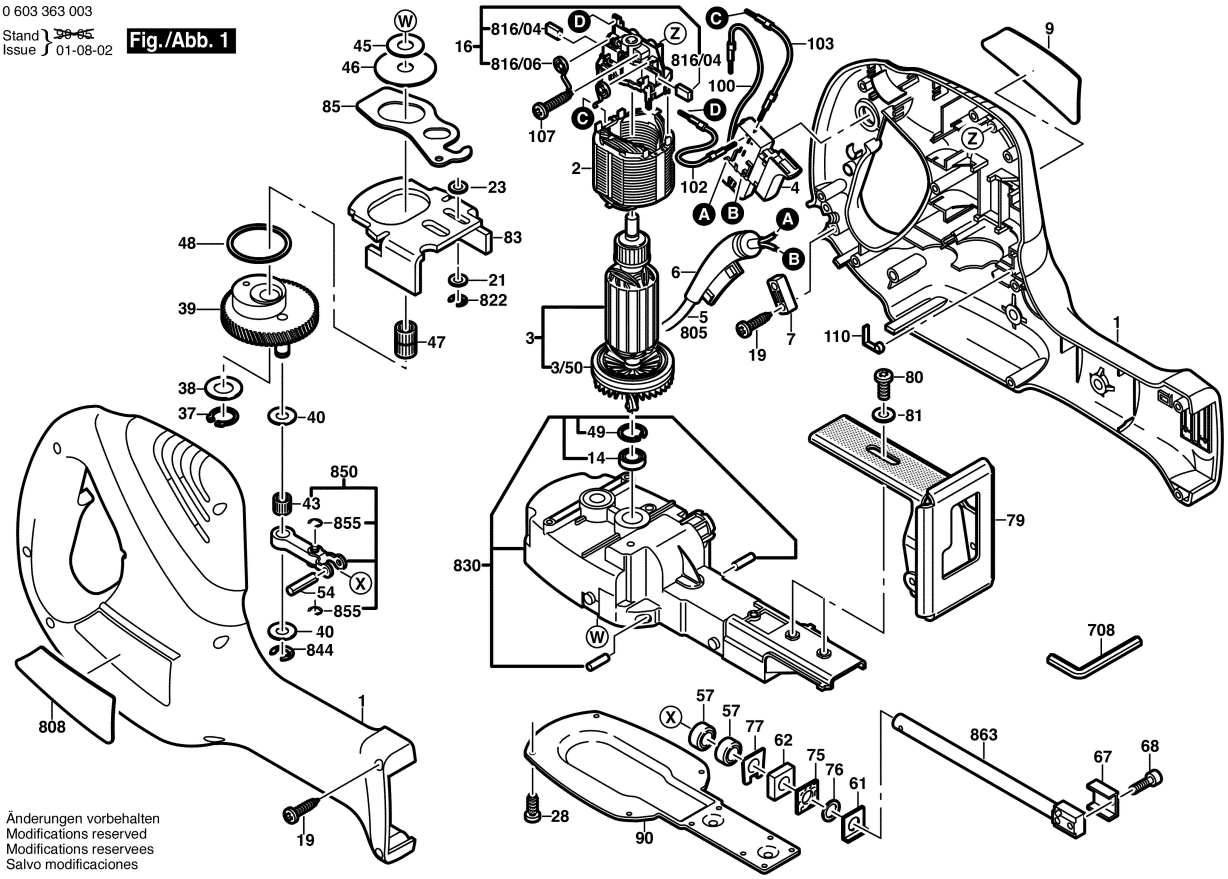

Änderungen vorbehalten
Modifications reserved
Modifications reservees
Salvo modificaciones