0 603 380 003

Stand ~~00-11-16~~
Issue 00-11-21

Fig./Abb. 1

■ = 801

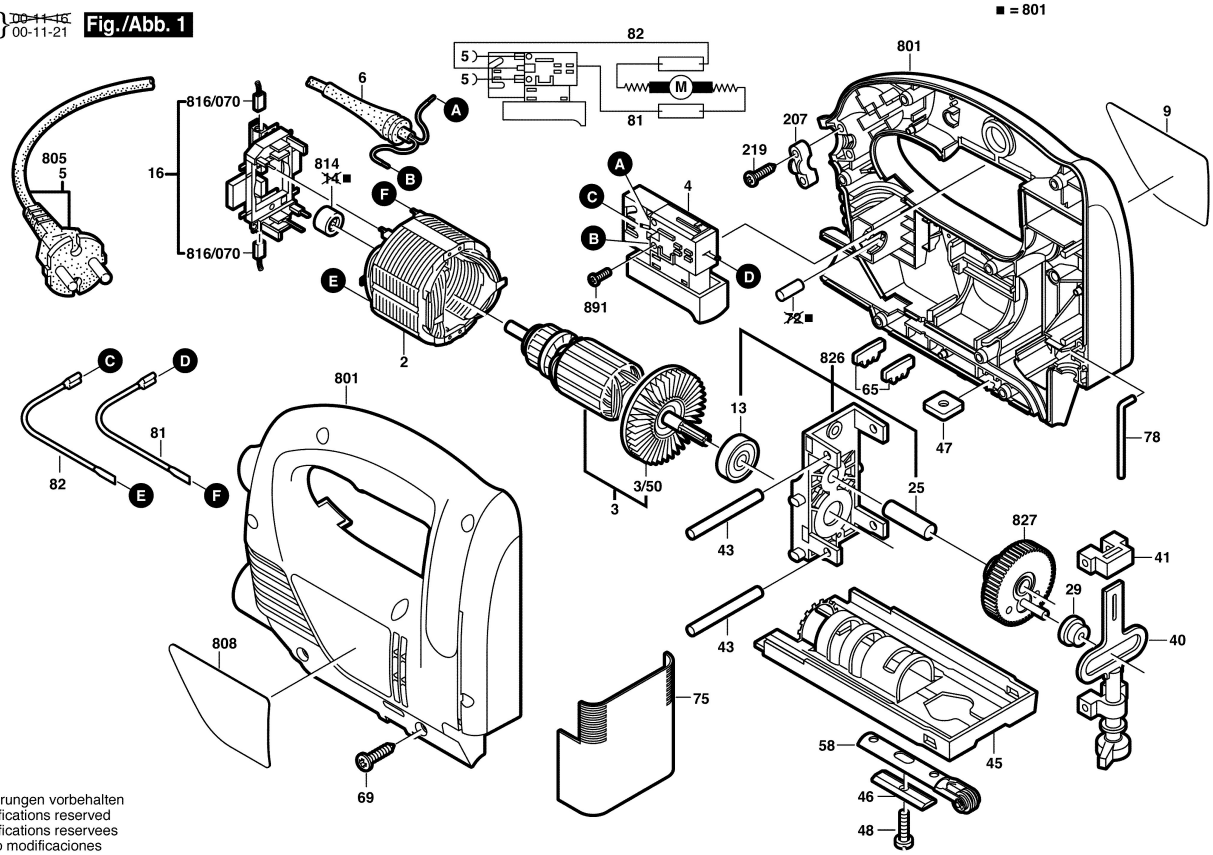

Änderungen vorbehalten
Modifications reserved
Modifications reservees
Salvo modificaciones