0 603 387 578

Stand ~~02-08-01~~
Issue 02-08-14

Fig./Abb. 1

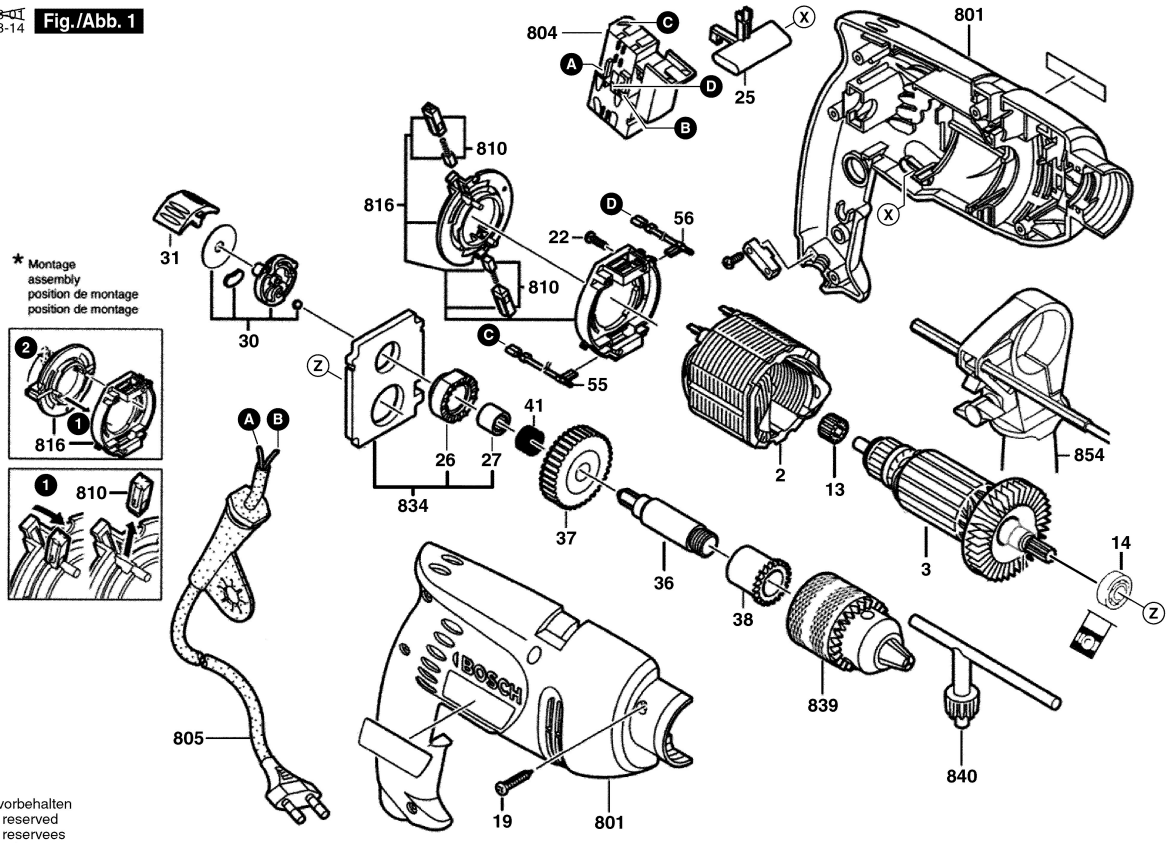

Änderungen vorbehalten
Modifications reserved
Modifications reservees
Salvo modificaciones