0 611 225 503
Issue / Stand } 05-05-31 **Fig./Abb. 1**

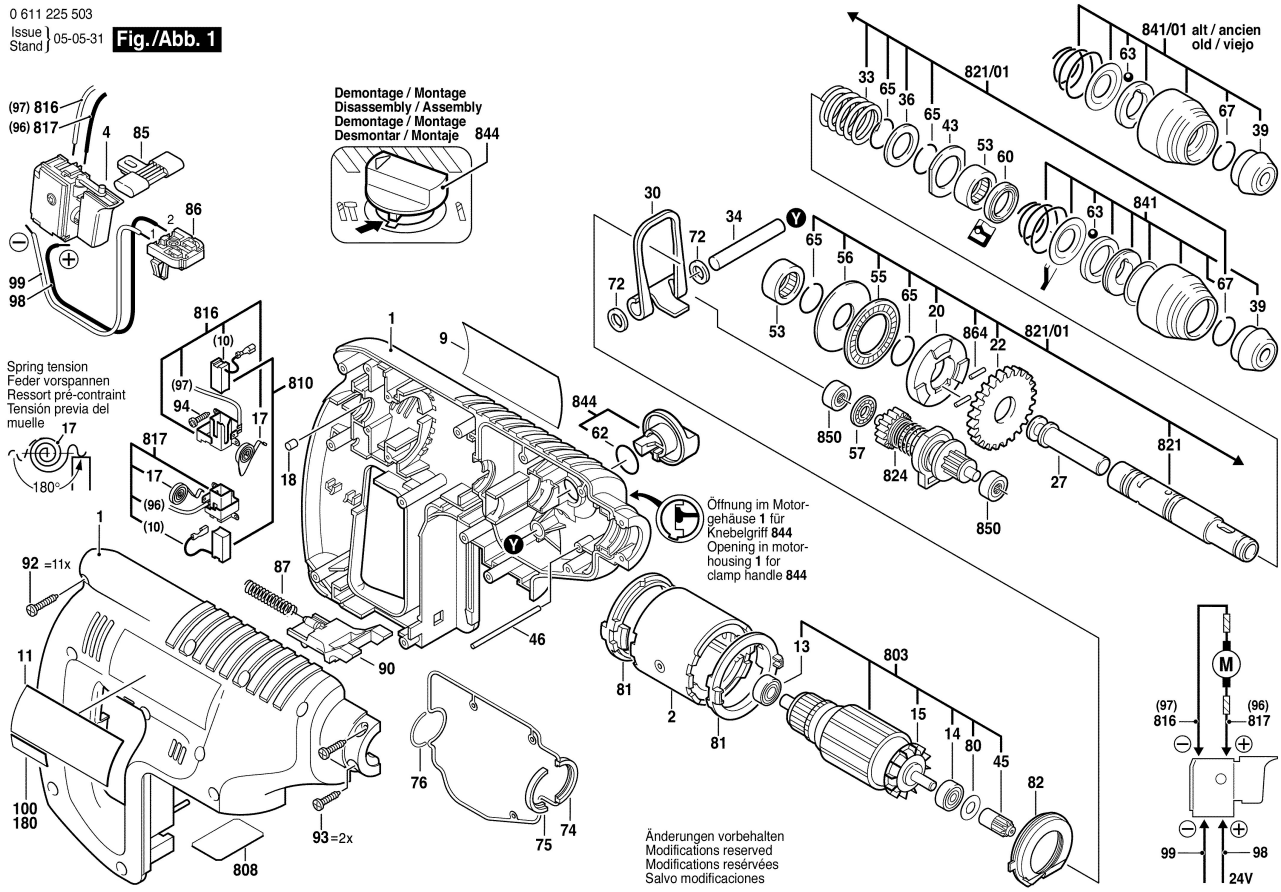
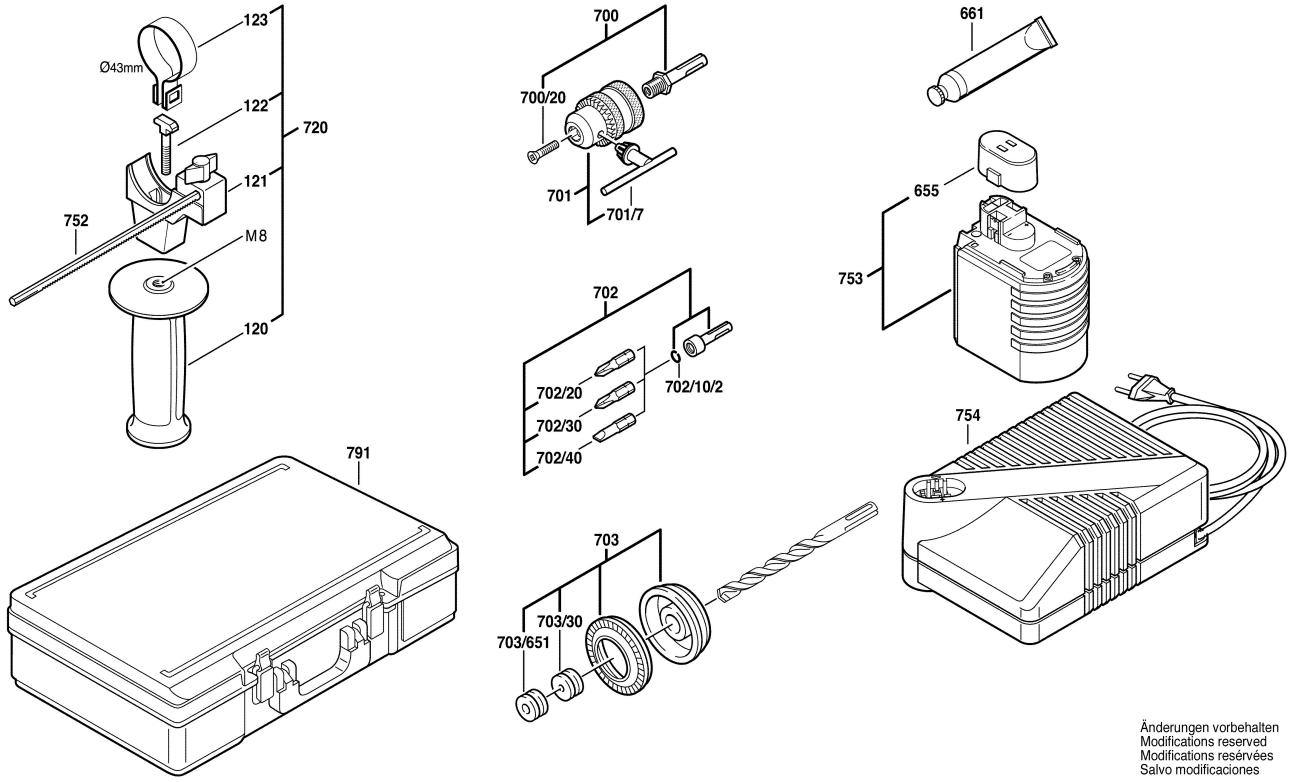
0 611 225 503
Issue / Stand } 05-05-31 **Fig./Abb. 2**