0 611 228 703; 743
Issue / Stand 06-09-25

## Fig./Abb. 1

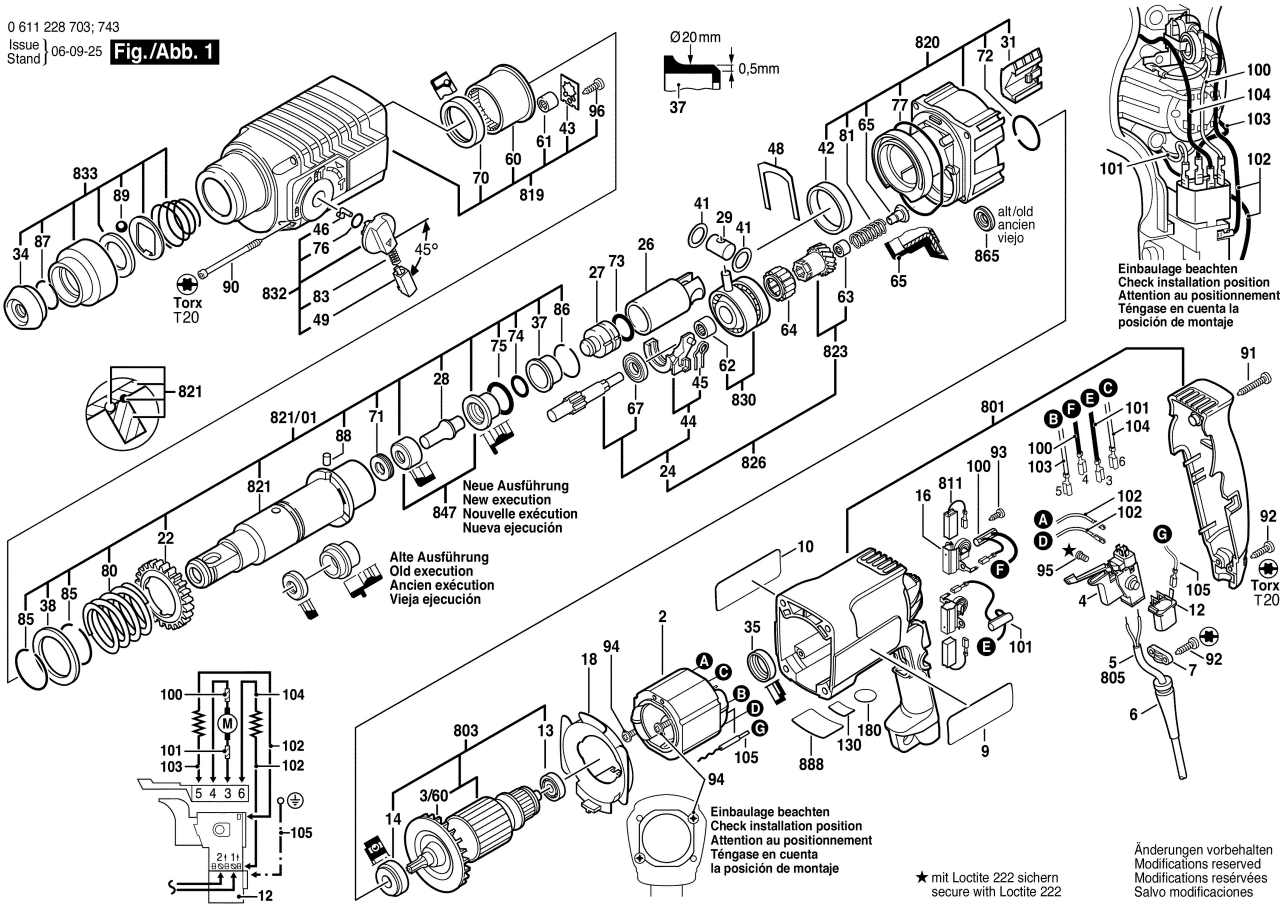


0 611 228 703; 743
Issue / Stand 06-09-25
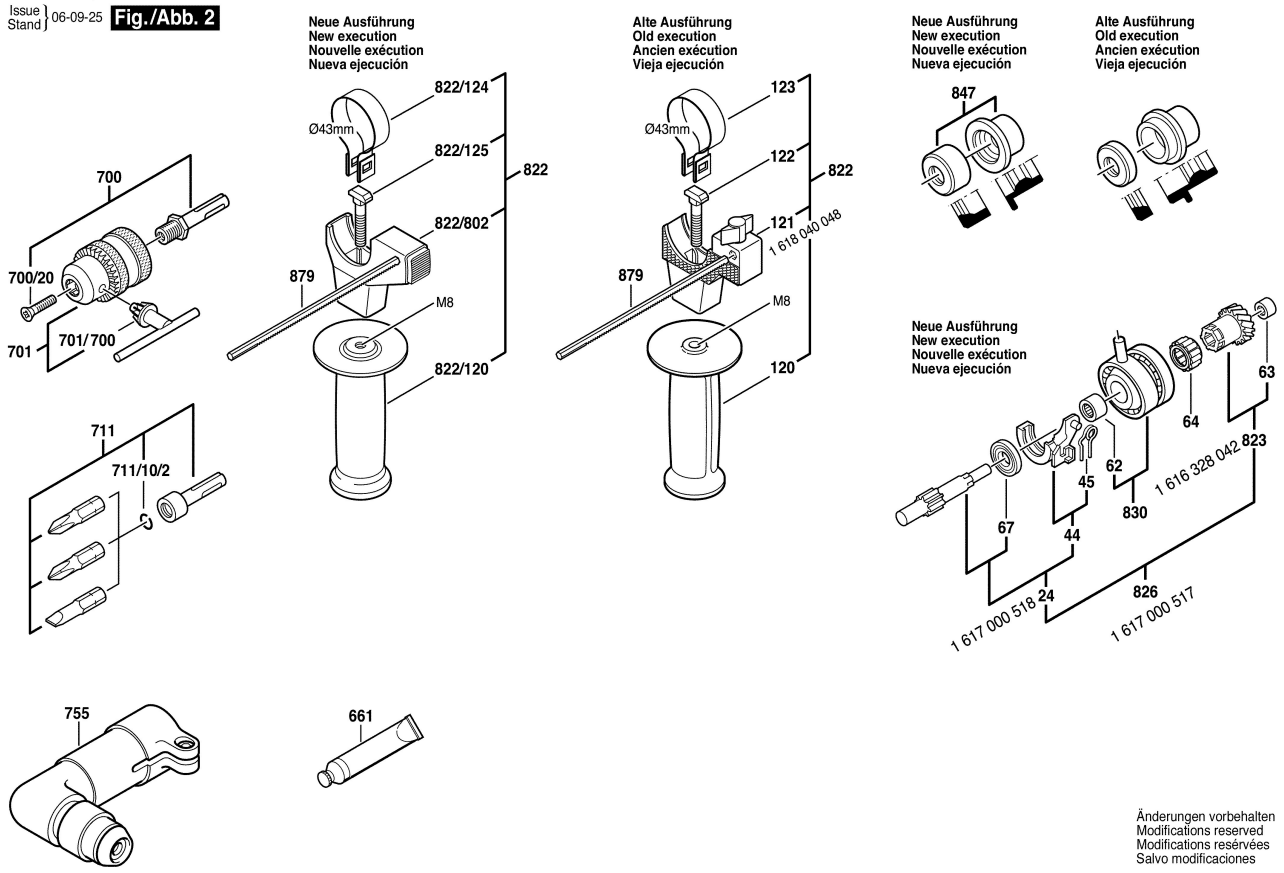
## Fig./Abb. 2