0 611 228 783
Issue Stand } 05-08-10 **Fig./Abb. 1**

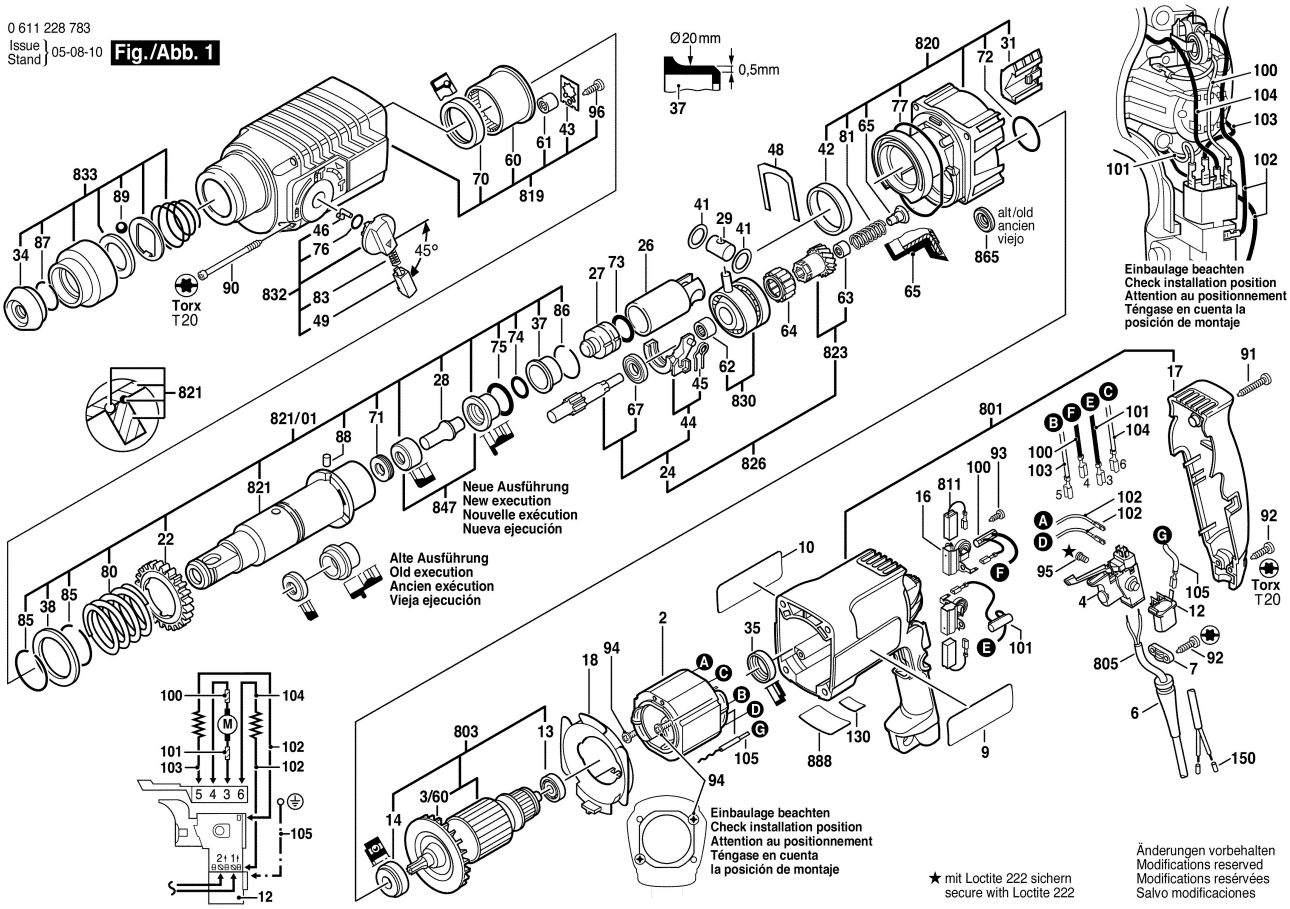
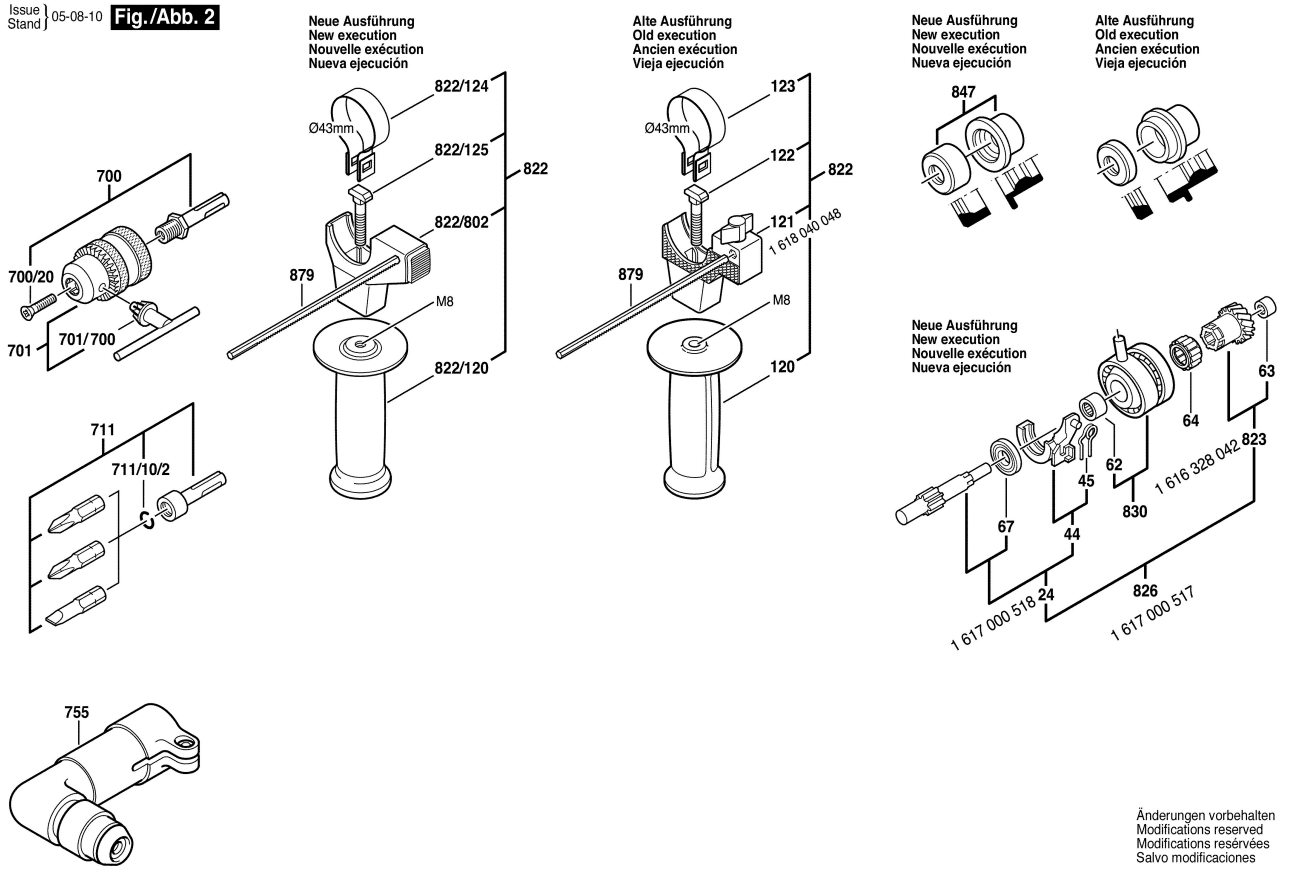
0 611 228 783
Issue Stand } 05-08-10 **Fig./Abb. 2**