0 611 318 703
Issue / Stand 07-10-02

Fig./Abb. 1

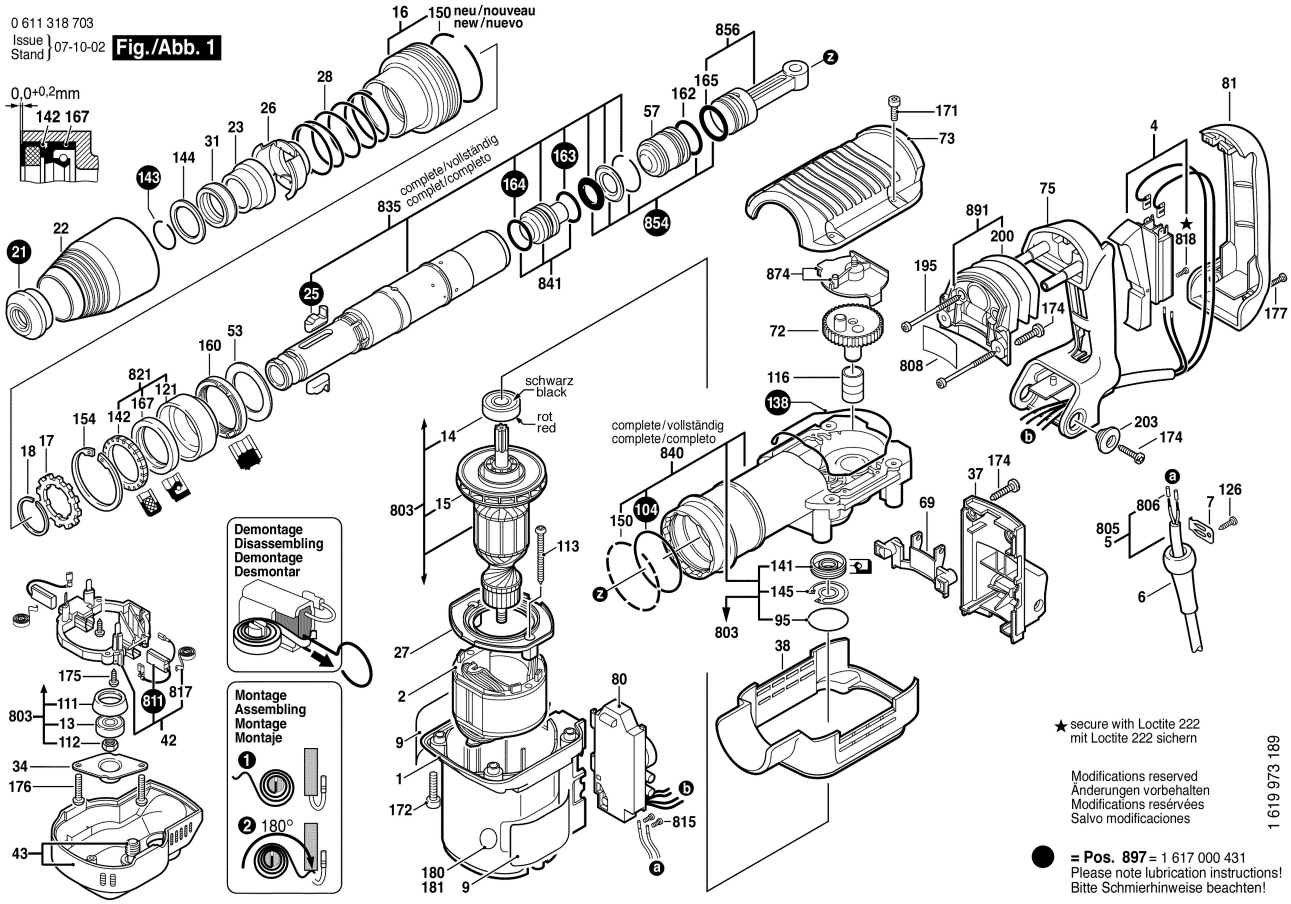

0 611 318 703; 743
Issue / Stand 07-10-02
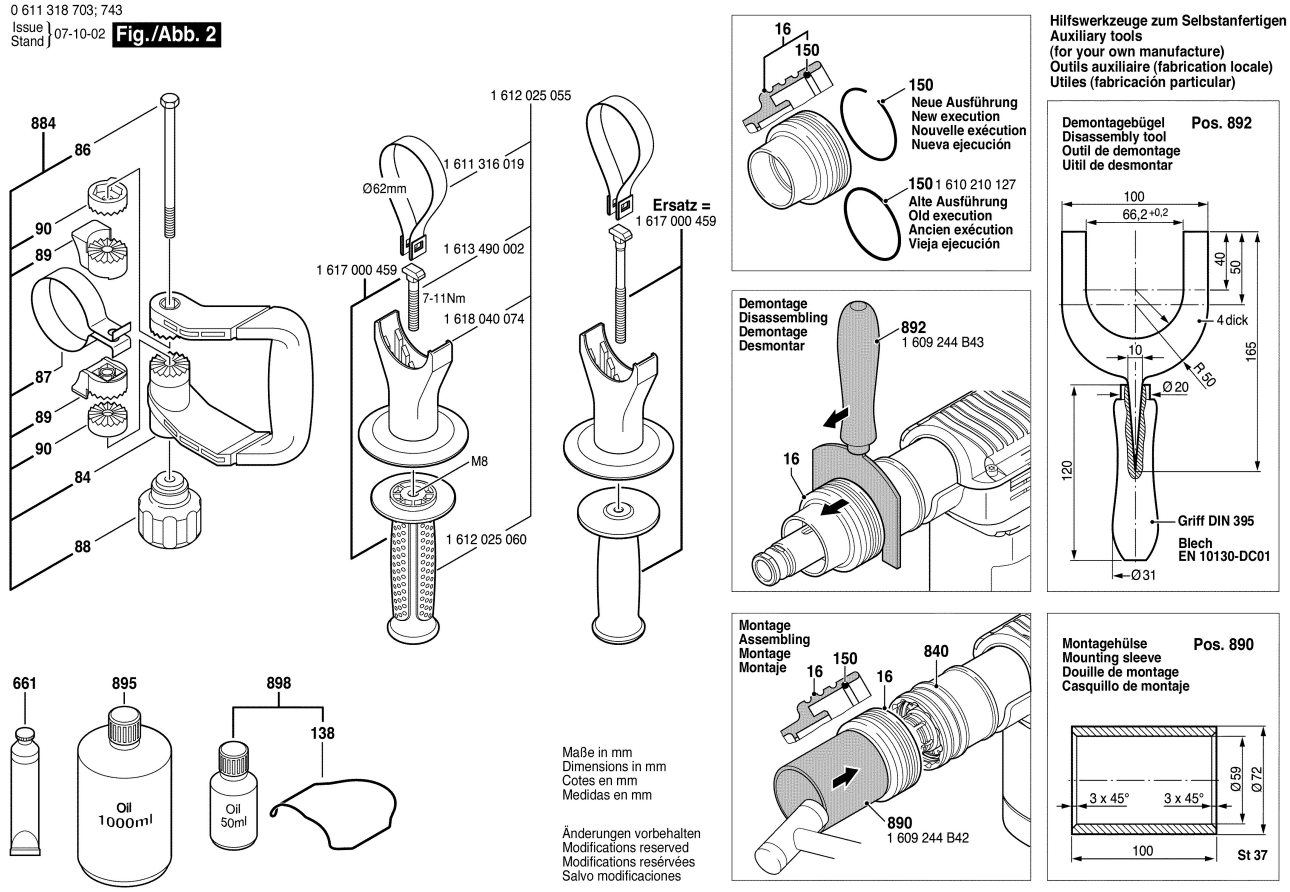
Fig./Abb. 2