2 610 007 634
Issue / Stand 10-05-14 **Fig. /Abb. 1**

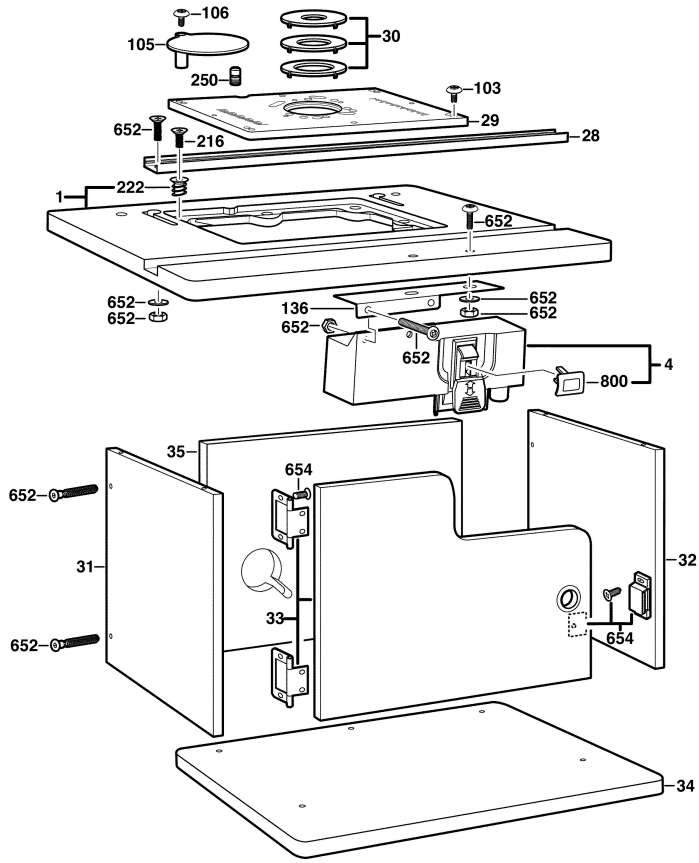

Motor Mounting Hardware

653
- 1/4-20 x 1-1/2" (4)
- 10-24 x 3/4" (3)
- 10-32 x 3/4" (3)
- 8-32 x 3/4" (3)
- 5/16-18 x 3/4" (3)
- 1/4" (4)
- 1/4-20 (4)

Änderungen vorbehalten
Modifications reserved
Modifications resérvées
Salvo modificaciones

2 610 007 634
Issue / Stand 10-05-14 **Fig. /Abb. 2**

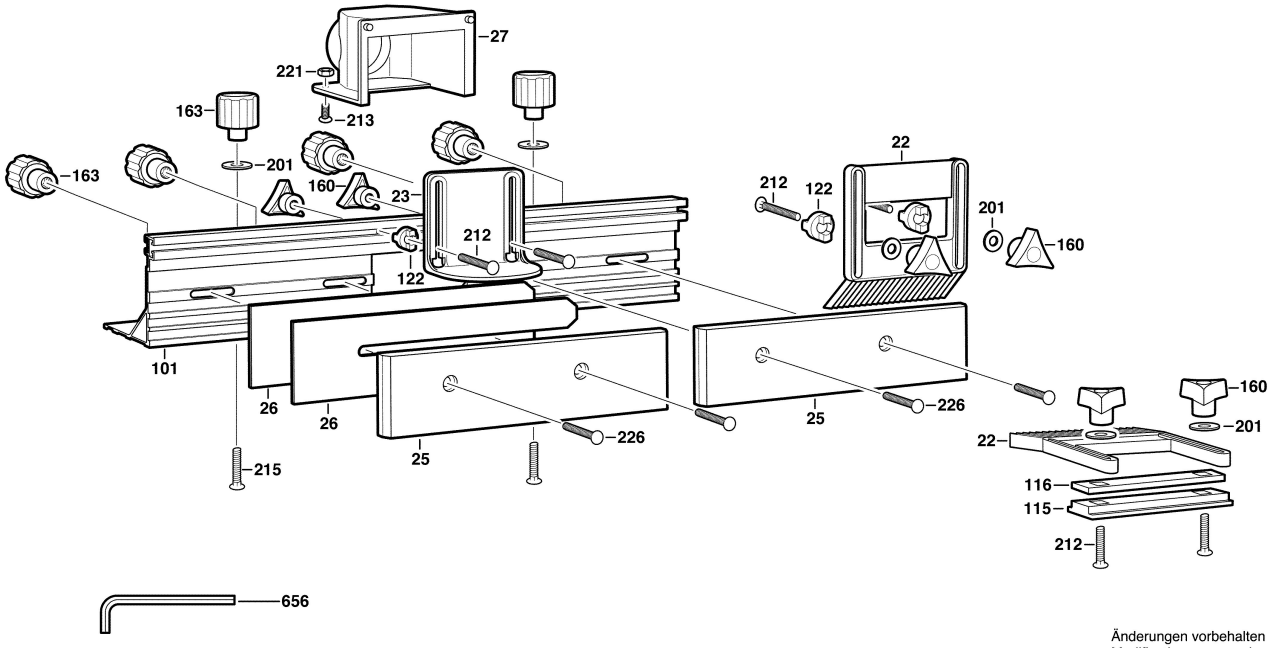

Änderungen vorbehalten
Modifications reserved
Modifications resérvées
Salvo modificaciones