3 600 H76 B01
Stand / Issue } 10-04-01 **Fig. /Abb. 1**

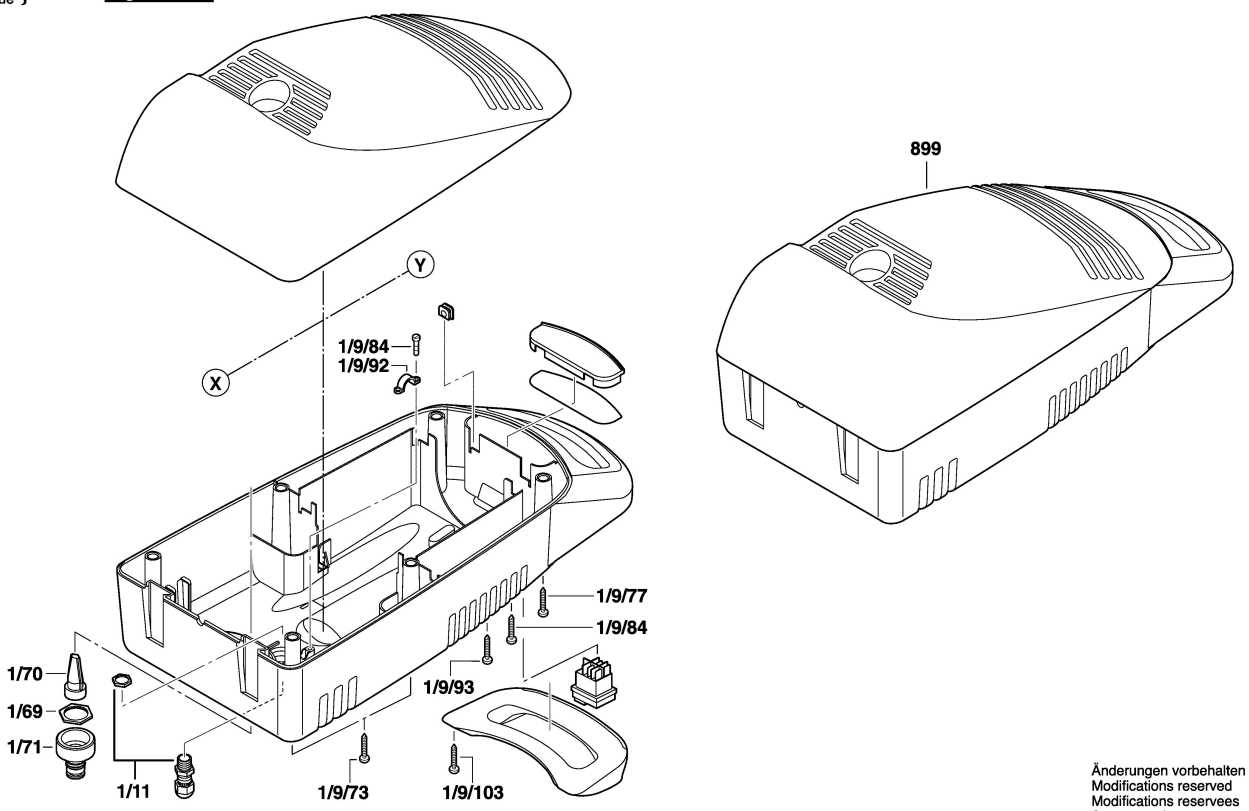

Änderungen vorbehalten
Modifications reserved
Modifications reservees
Salvo modificaciones

3 600 H76 B01
Stand / Issue } ~~12-04-04~~ 12-10-23 **Fig./Abb. 2**

★ = 1/3
▲ = 1/16

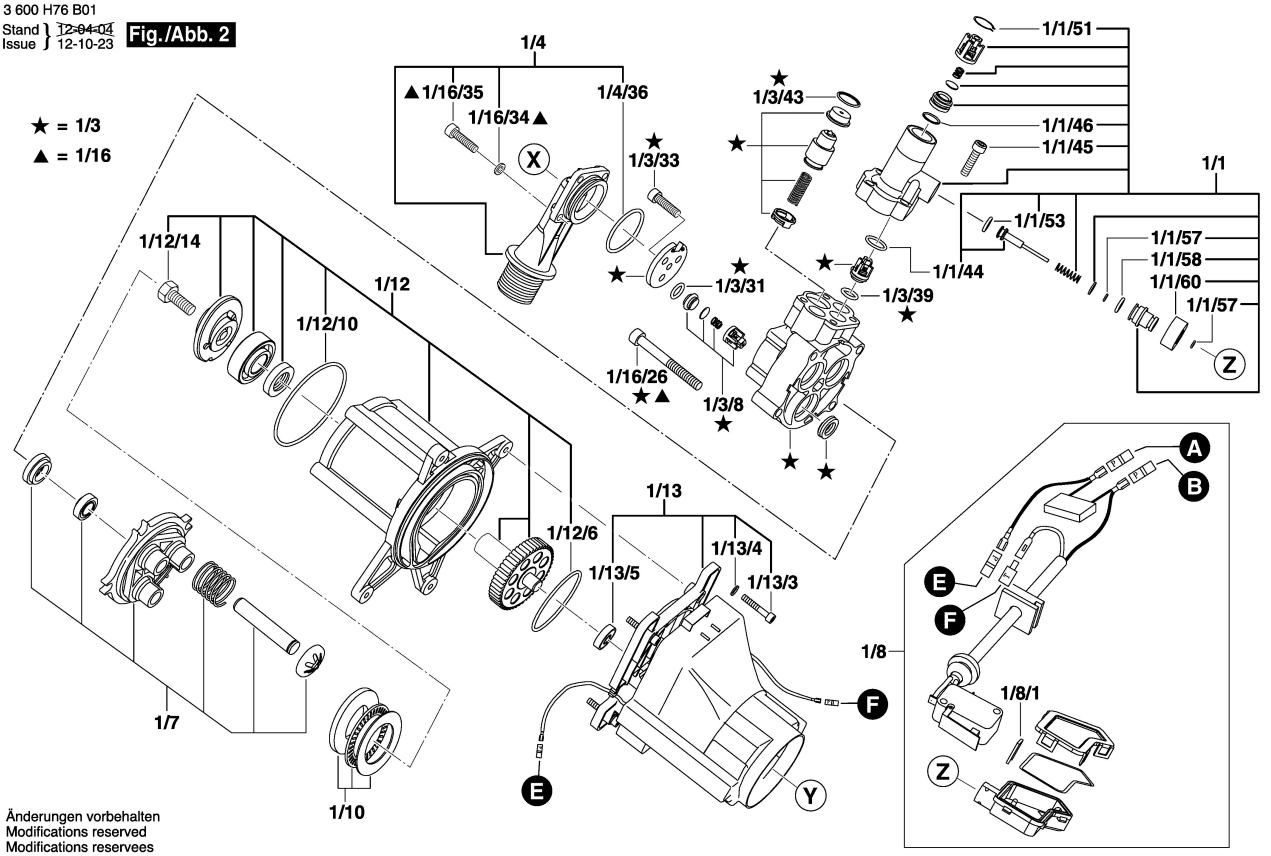

Änderungen vorbehalten
Modifications reserved
Modifications reservees
Salvo modificaciones