3 600 H81 704

Stand / Issue 12-11-28
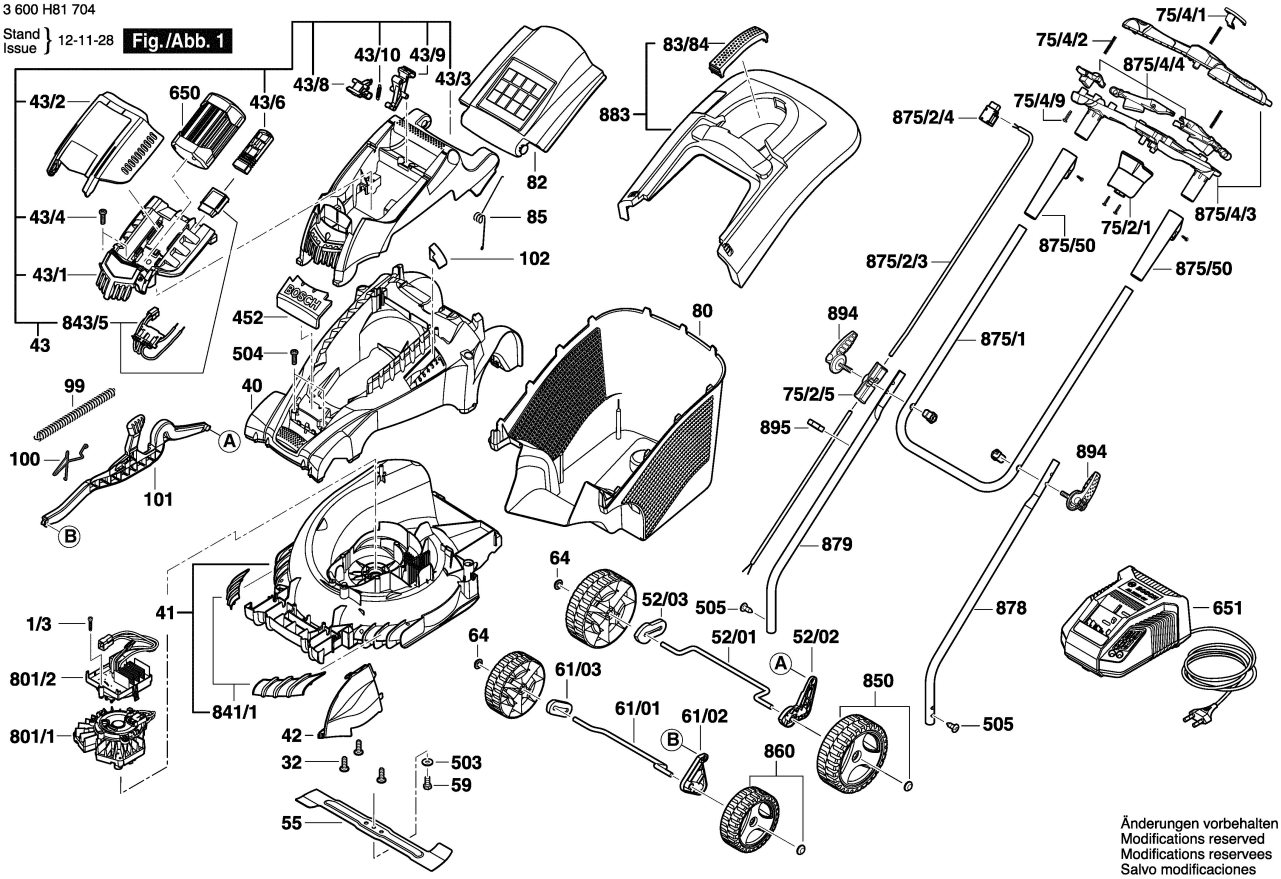
Fig./Abb. 1