3 600 H81 700

Stand } ~~12-08-29~~
Issue } 12-08-31
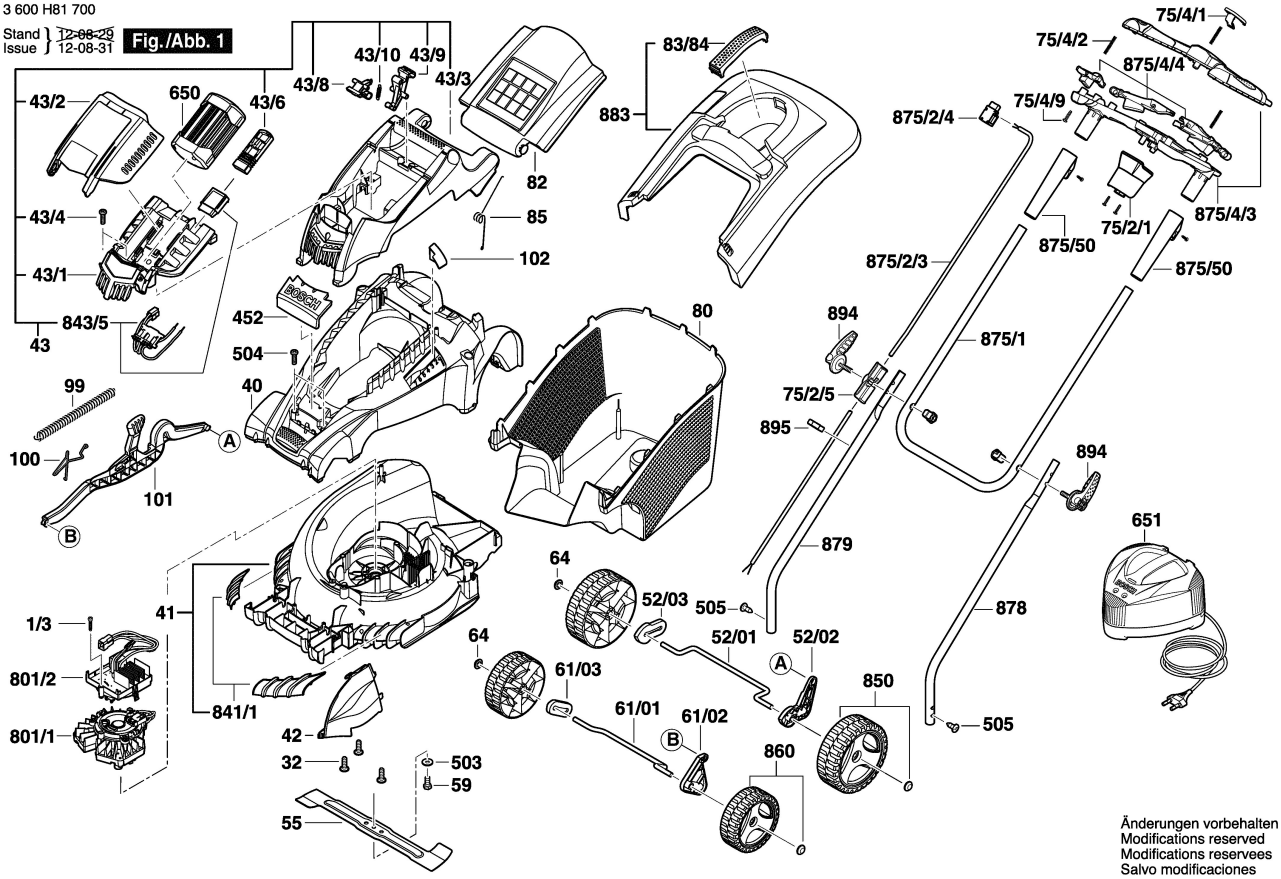
Fig./Abb. 1