3 600 H8A 000
Stand } ~~11-12~~
Issue } 12-08-03

Fig./Abb. 1

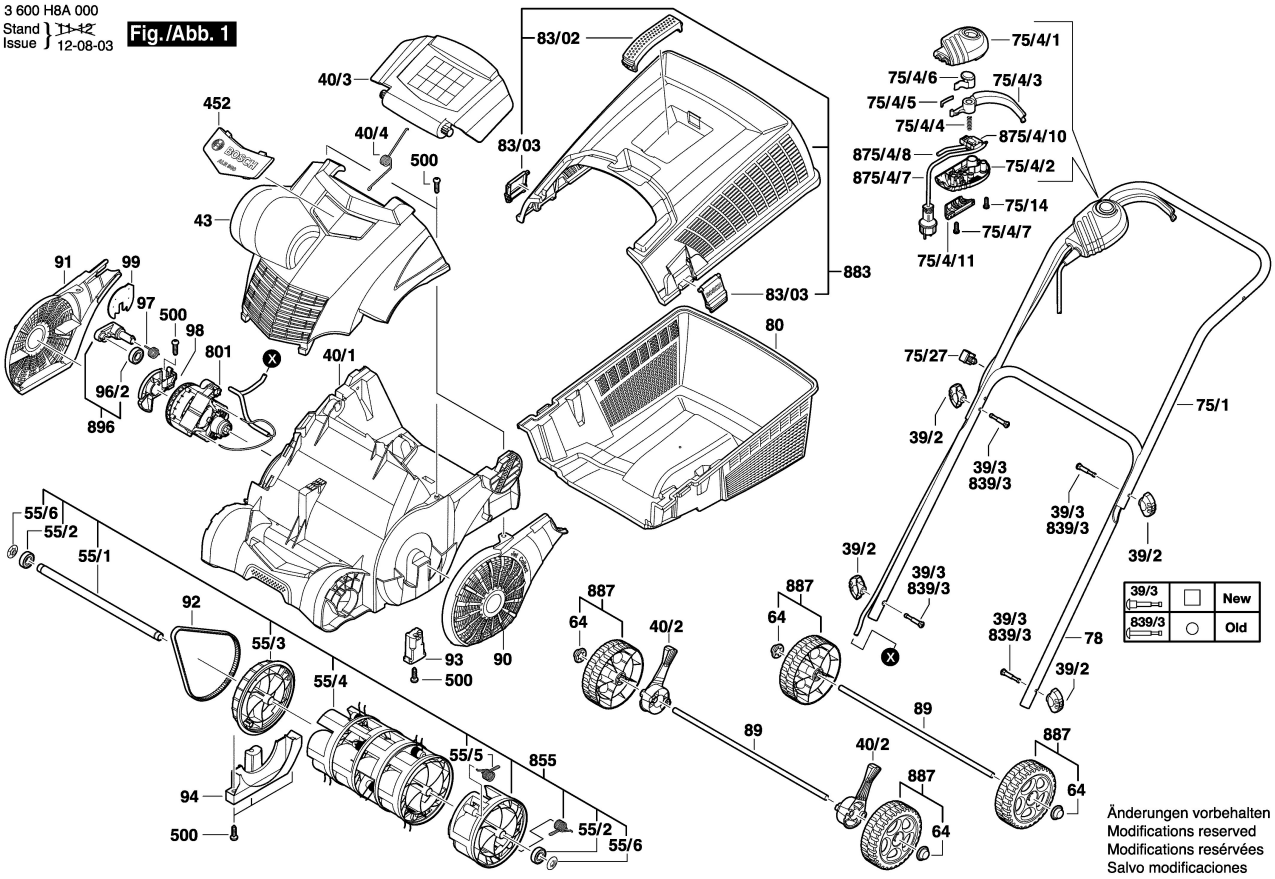

Änderungen vorbehalten
Modifications reserved
Modifications resérvées
Salvo modificaciones