3 600 HA4 501

Stand } ~~13-11-06~~
Issue } 13-11-08 **Fig./Abb. 1**

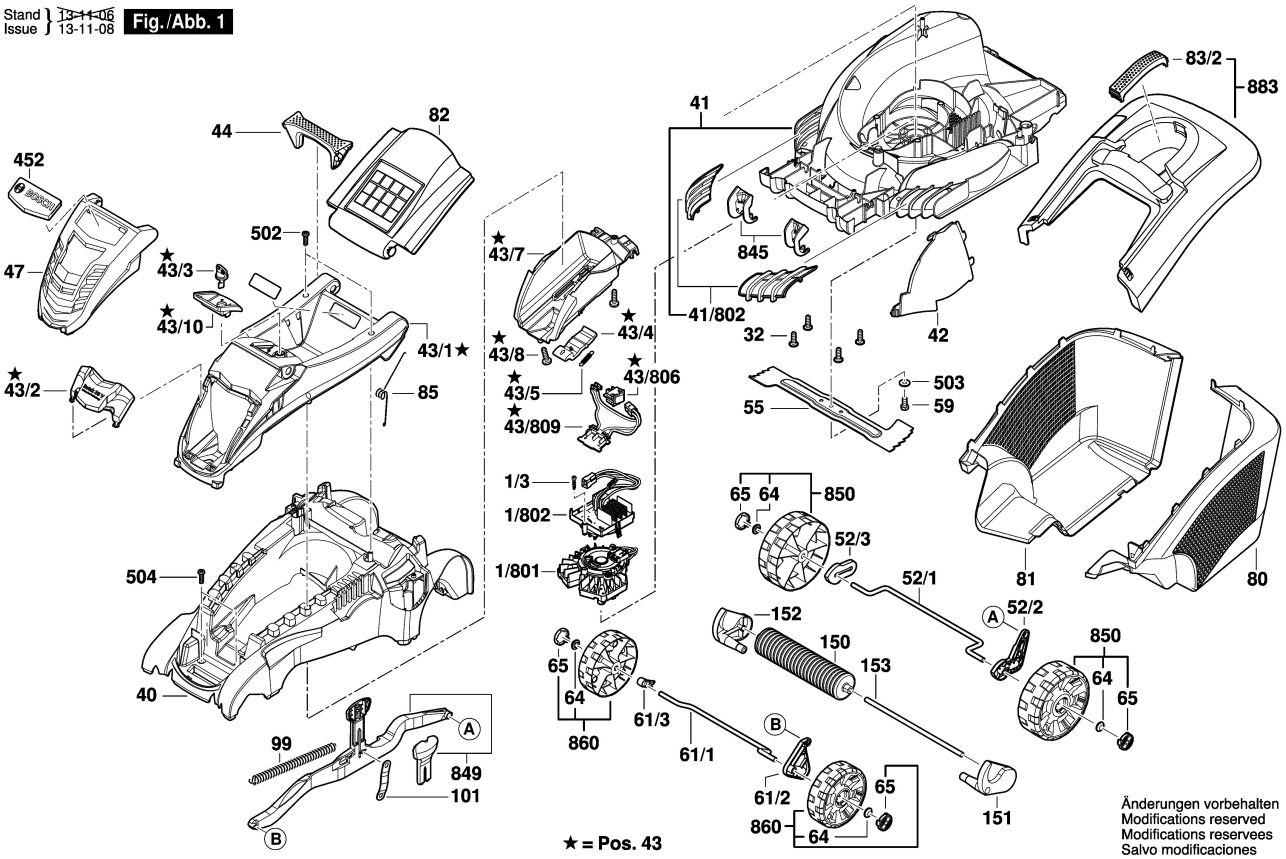

Änderungen vorbehalten
Modifications reserved
Modifications reservees
Salvo modificaciones

3 600 HA4 501

Stand } ~~13-11~~
Issue } 14-01-30 **Fig./Abb. 2**

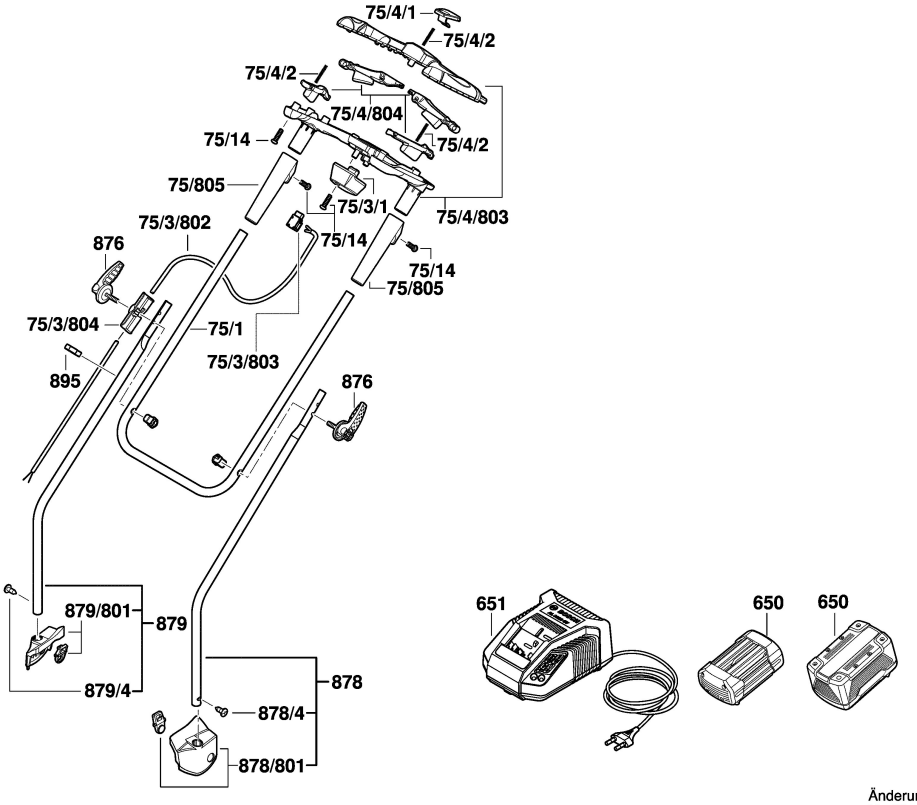

Änderungen vorbehalten
Modifications reserved
Modifications reservees
Salvo modificaciones