3 600 HA7 300

Stand / Issue } 14-05-19

Fig. /Abb. 1

★ = Pos. 810

▲ = Pos. 860

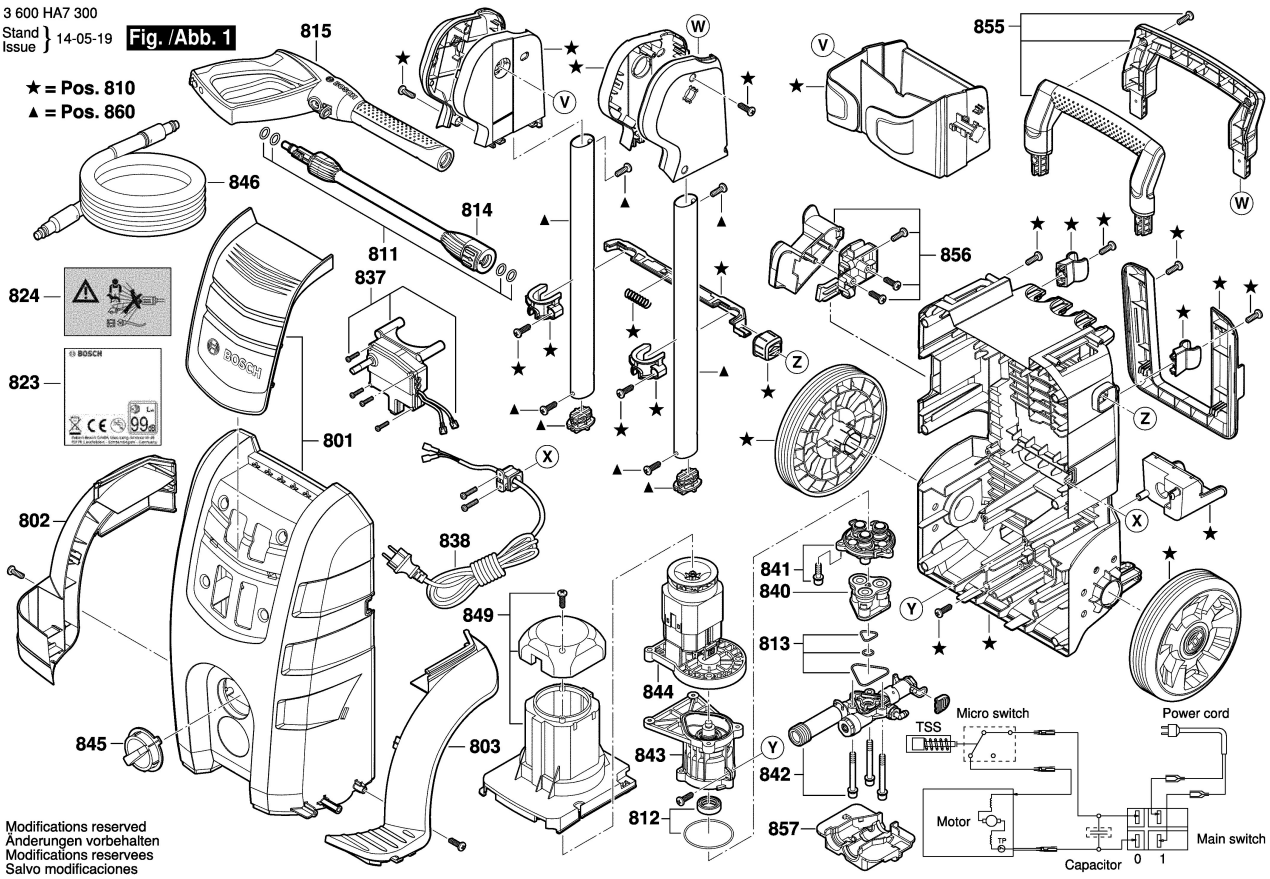

Modifications reserved
Änderungen vorbehalten
Modifications reservees
Salvo modificaciones