3 601 A9C 600

Stand } ~~13-05~~
Issue } 14-01-22
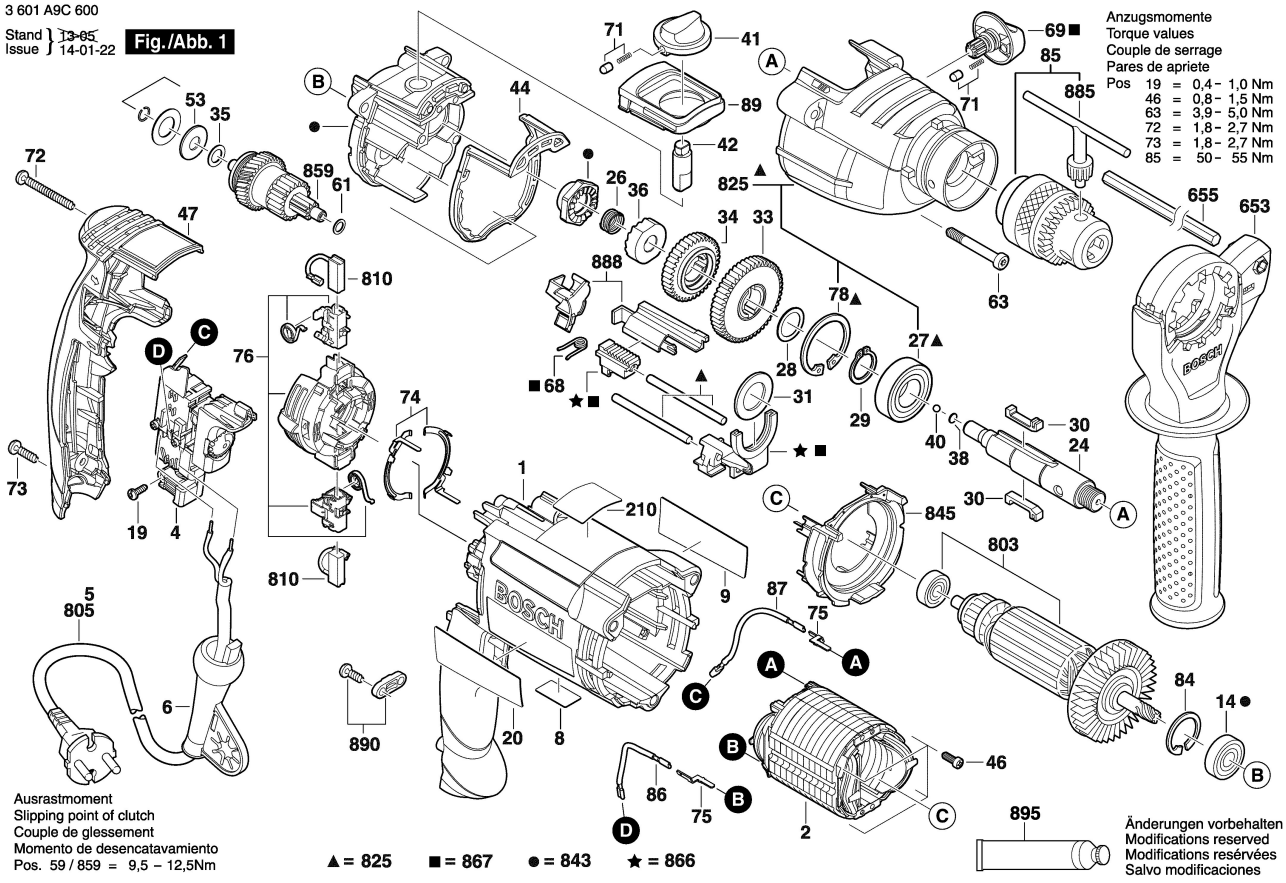
Fig./Abb. 1