3 601 A9C B00

Stand } 13-05
Issue } 14-01-22
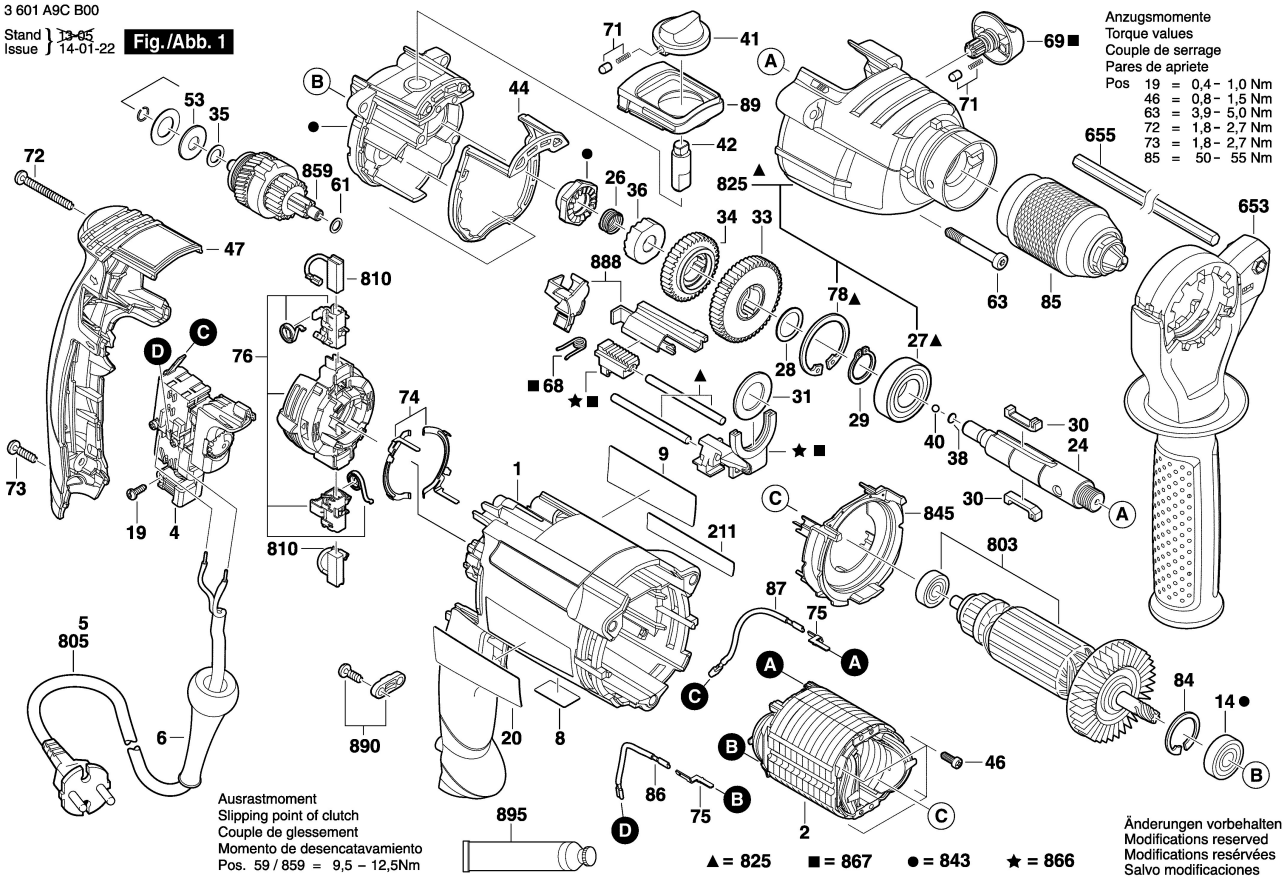
Fig./Abb. 1