3 601 B18 123

Stand ~~12-07~~
Issue 14-02-07
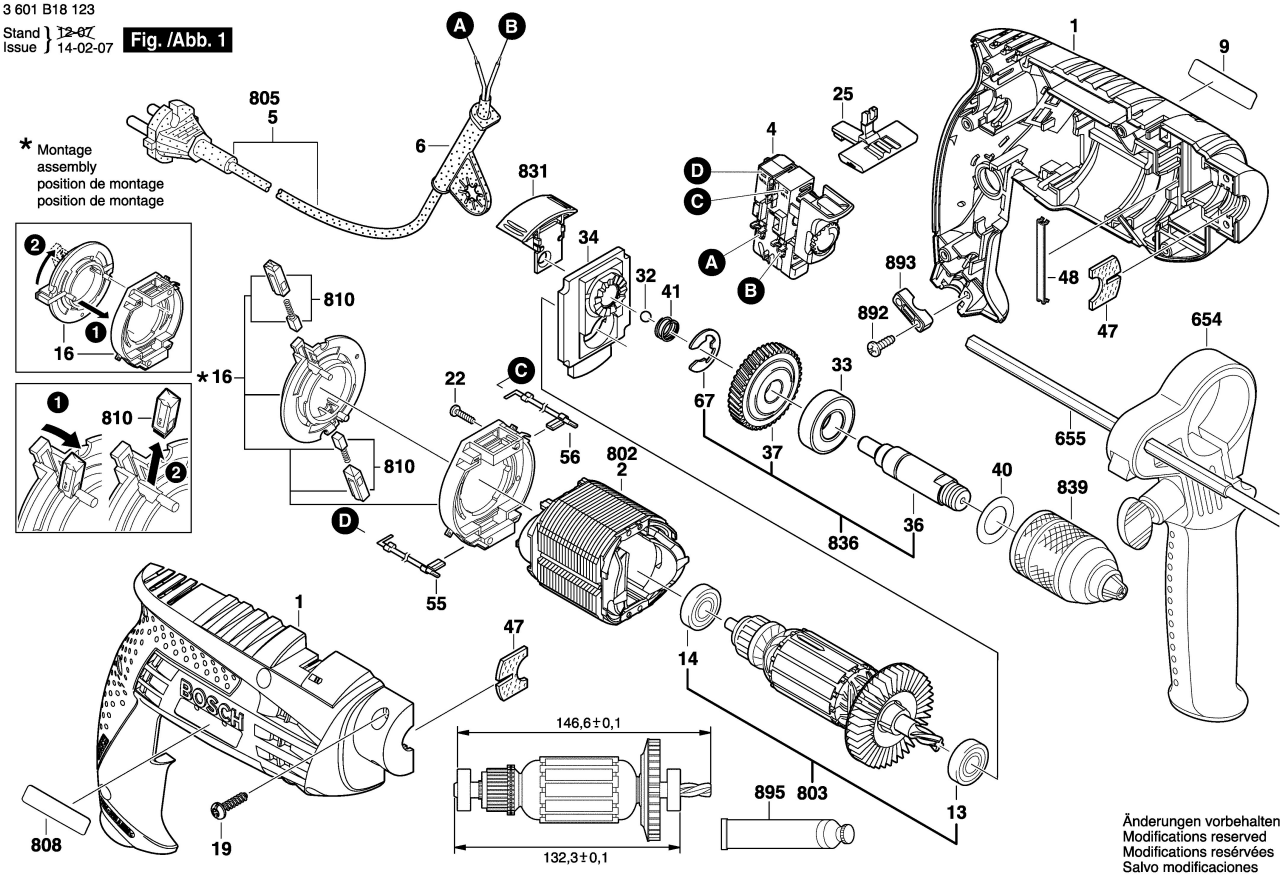
Fig. /Abb. 1