3 601 B25 000
Issue / Stand 13-10-11
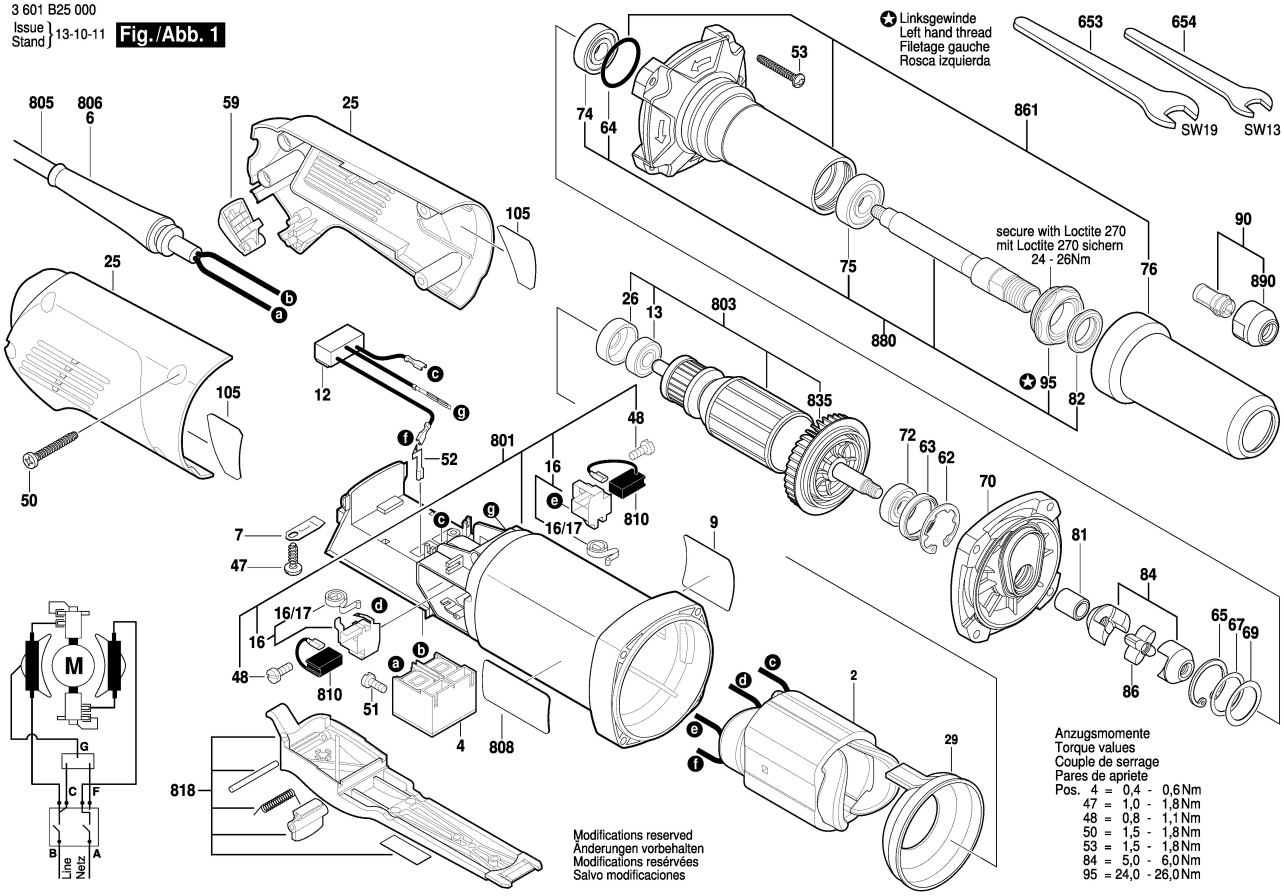
Fig./Abb. 1