3 601 E8E 010

Stand ~~07-07~~
Issue 09-01-14

Fig./Abb. 1

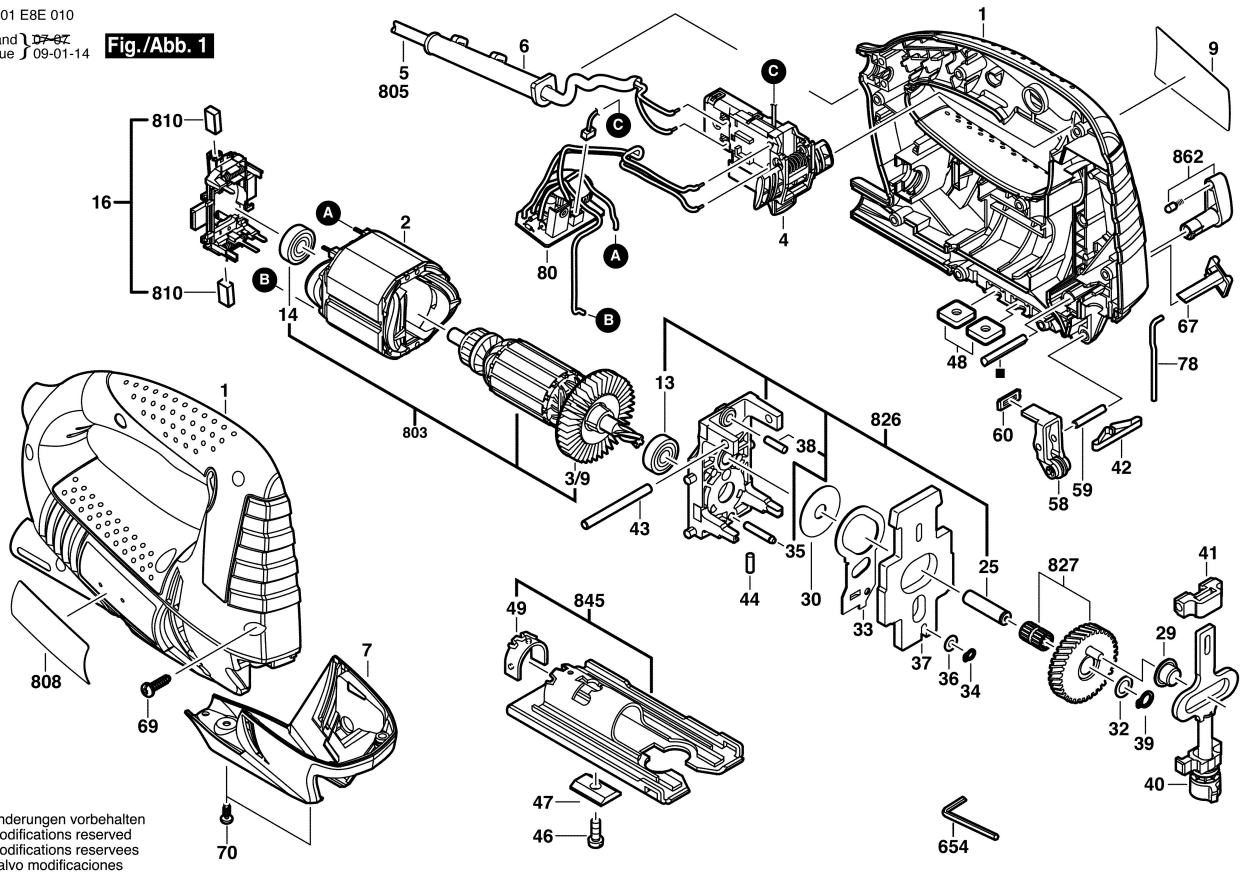

Änderungen vorbehalten
Modifications reserved
Modifications reservees
Salvo modificaciones