3 601 E94 210
Stand } ~~09-12~~
Issue } 13-01-30
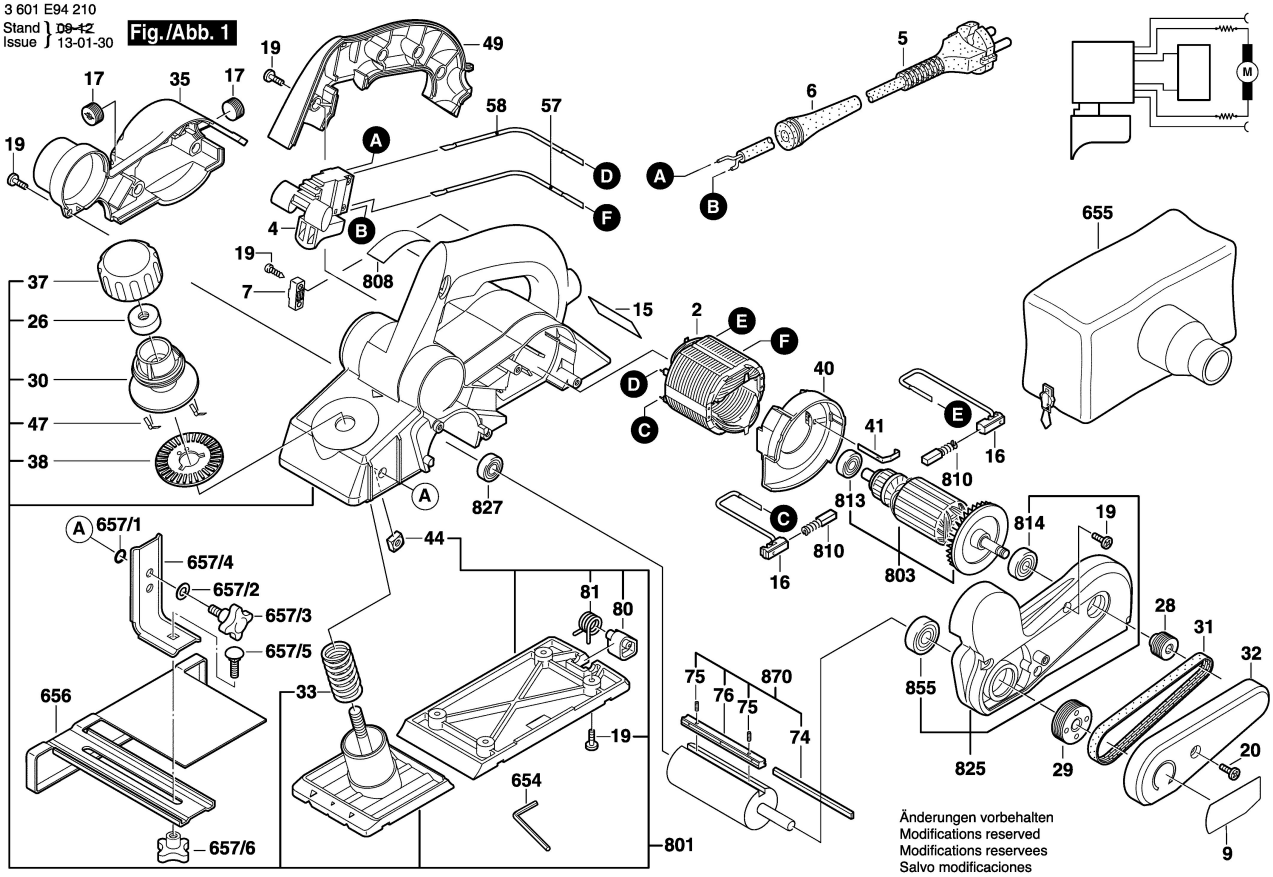
Fig./Abb. 1