3 601 F67 001
Issue
Stand } 13-02-26
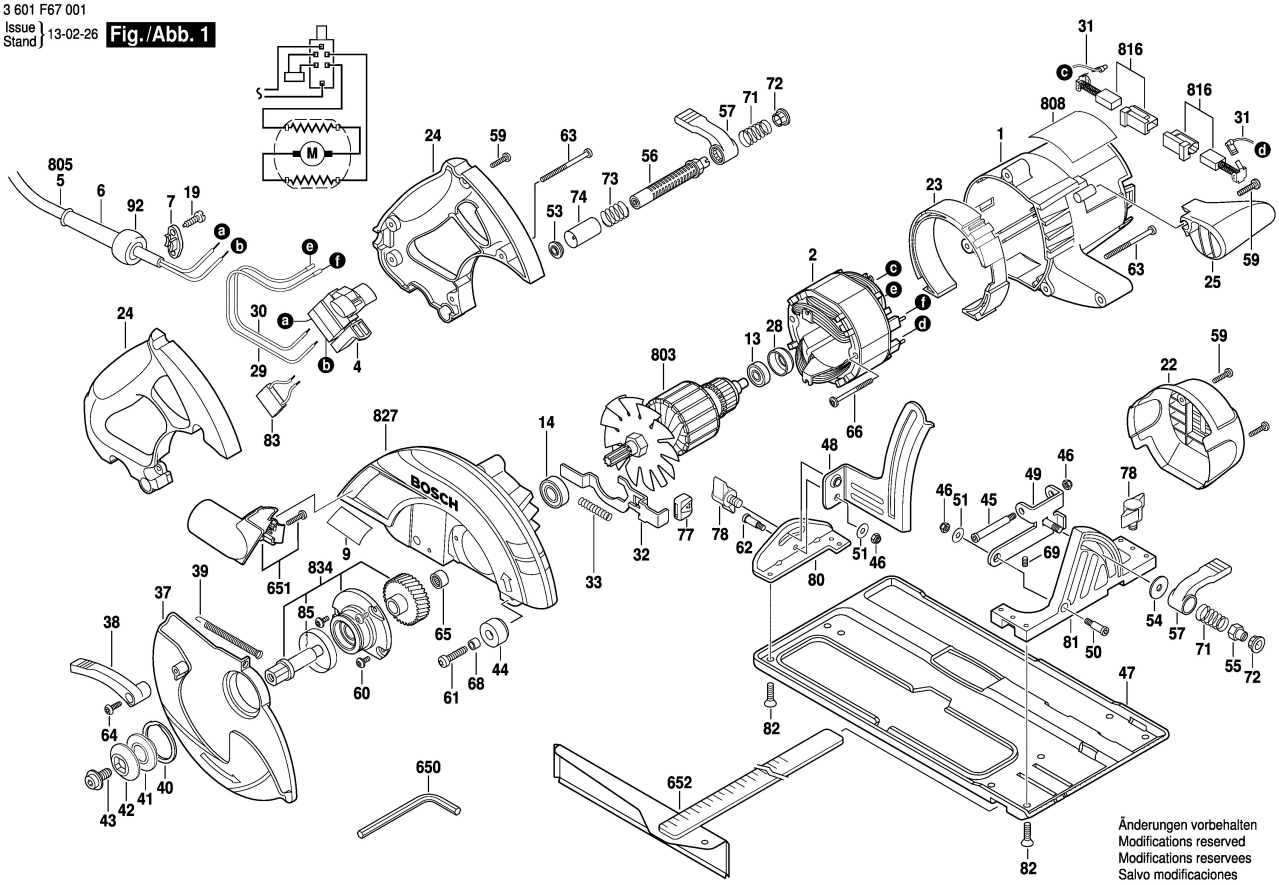
**Fig./Abb. 1**