3 601 F68 700
Issue
Stand } 13-02-26
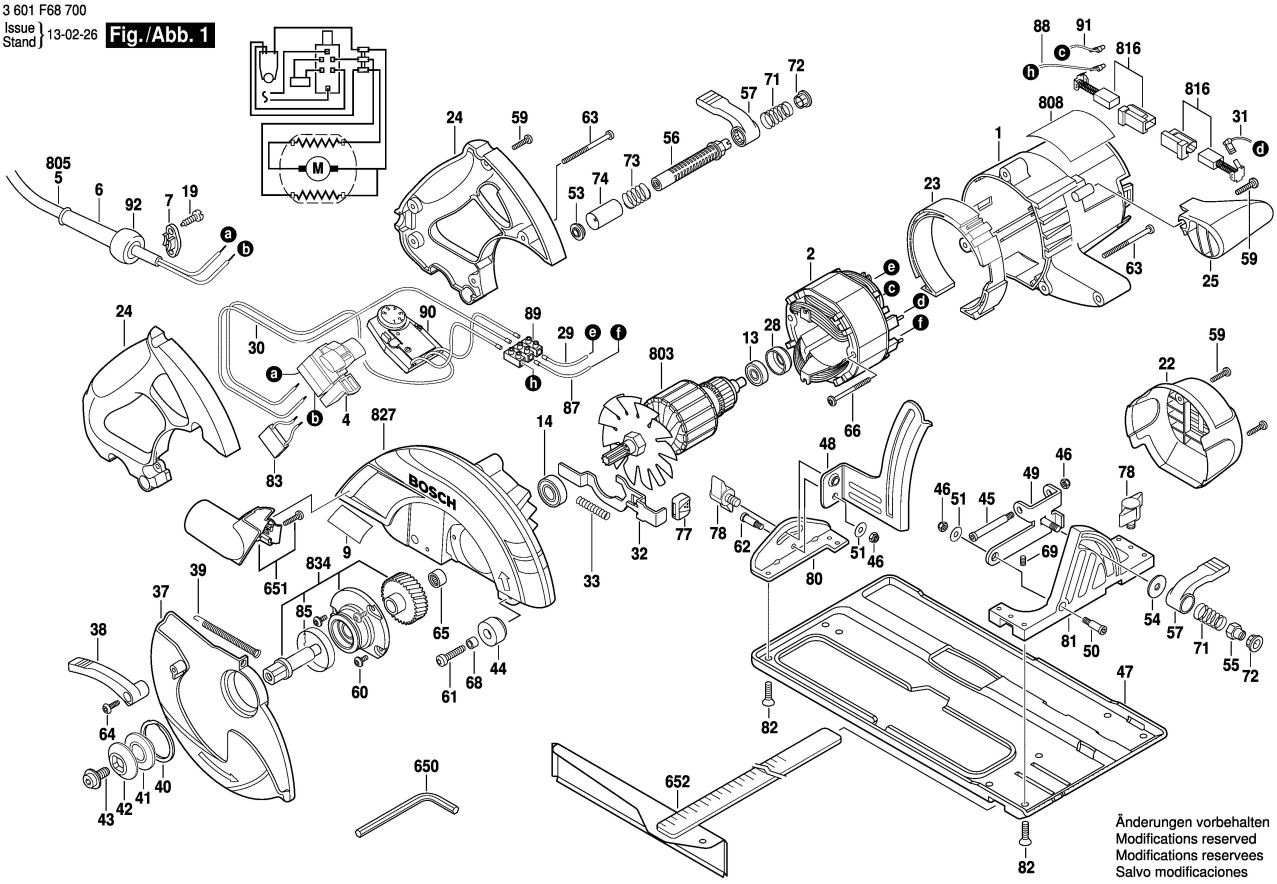
Fig./Abb. 1