3 601 F68 900
Issue Stand } 13-01-15
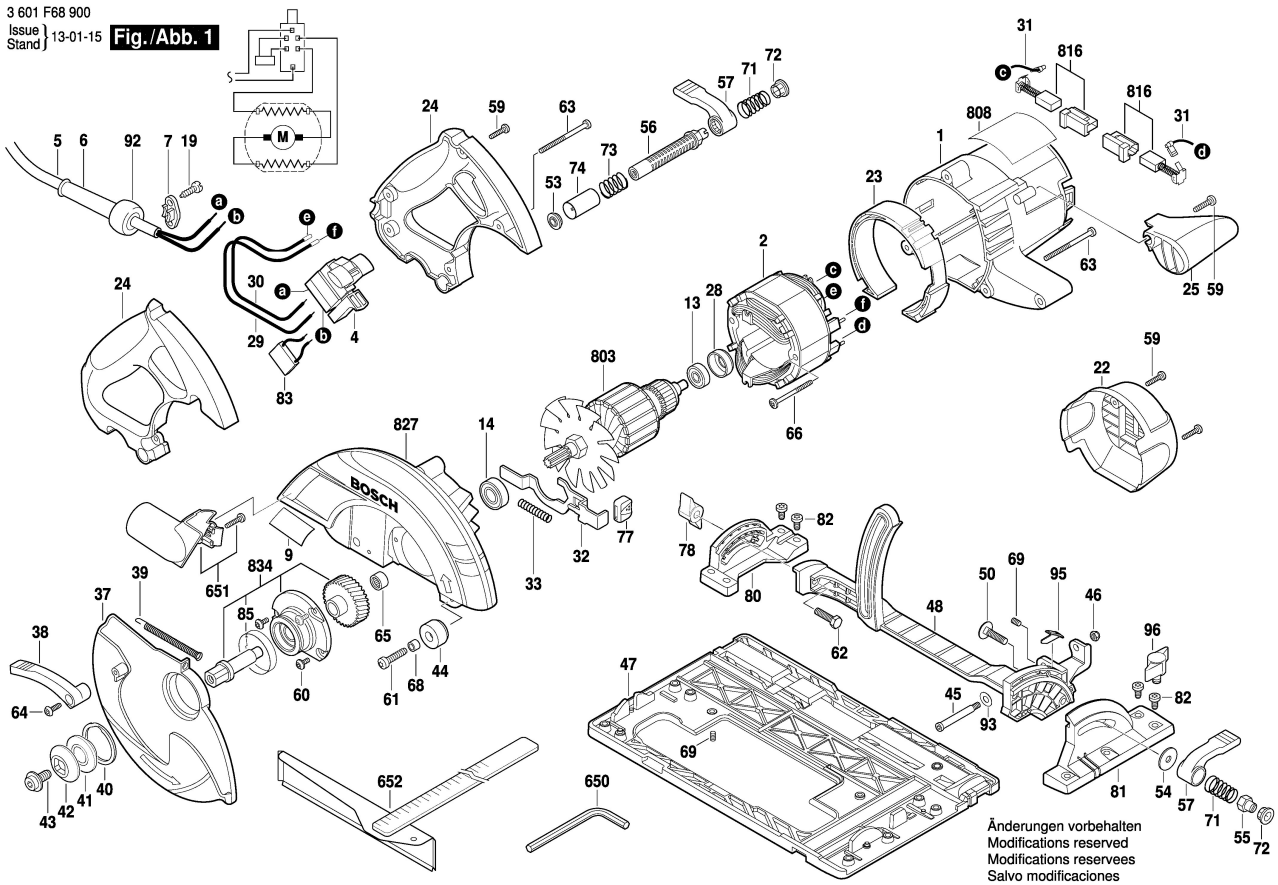
Fig./Abb. 1