3 601 F6H 000
Issue / Stand } 11-11-16
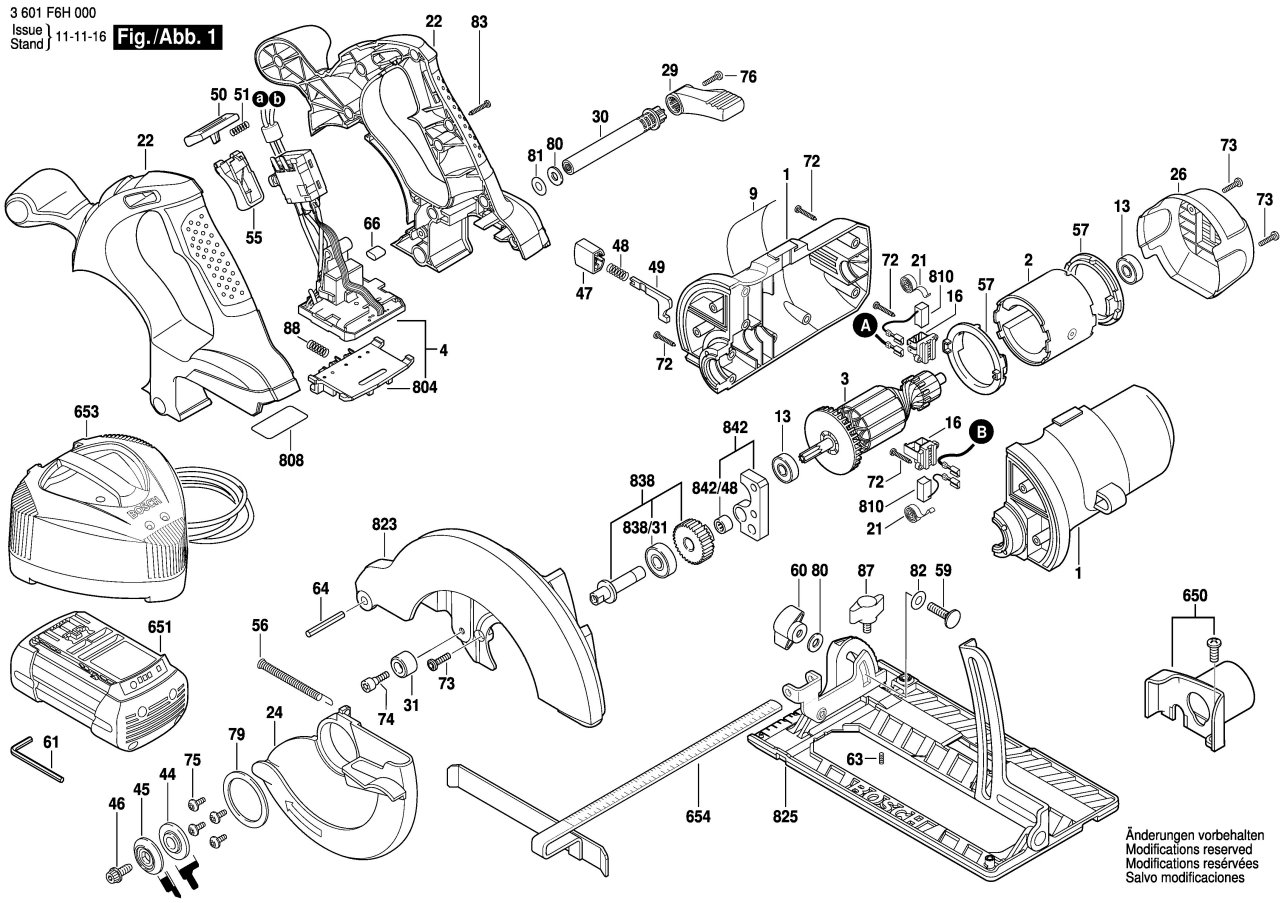
Fig./Abb. 1