3 601 H22 000

Stand } ~~07-09~~
Issue } 09-06-26

Fig./Abb. 1

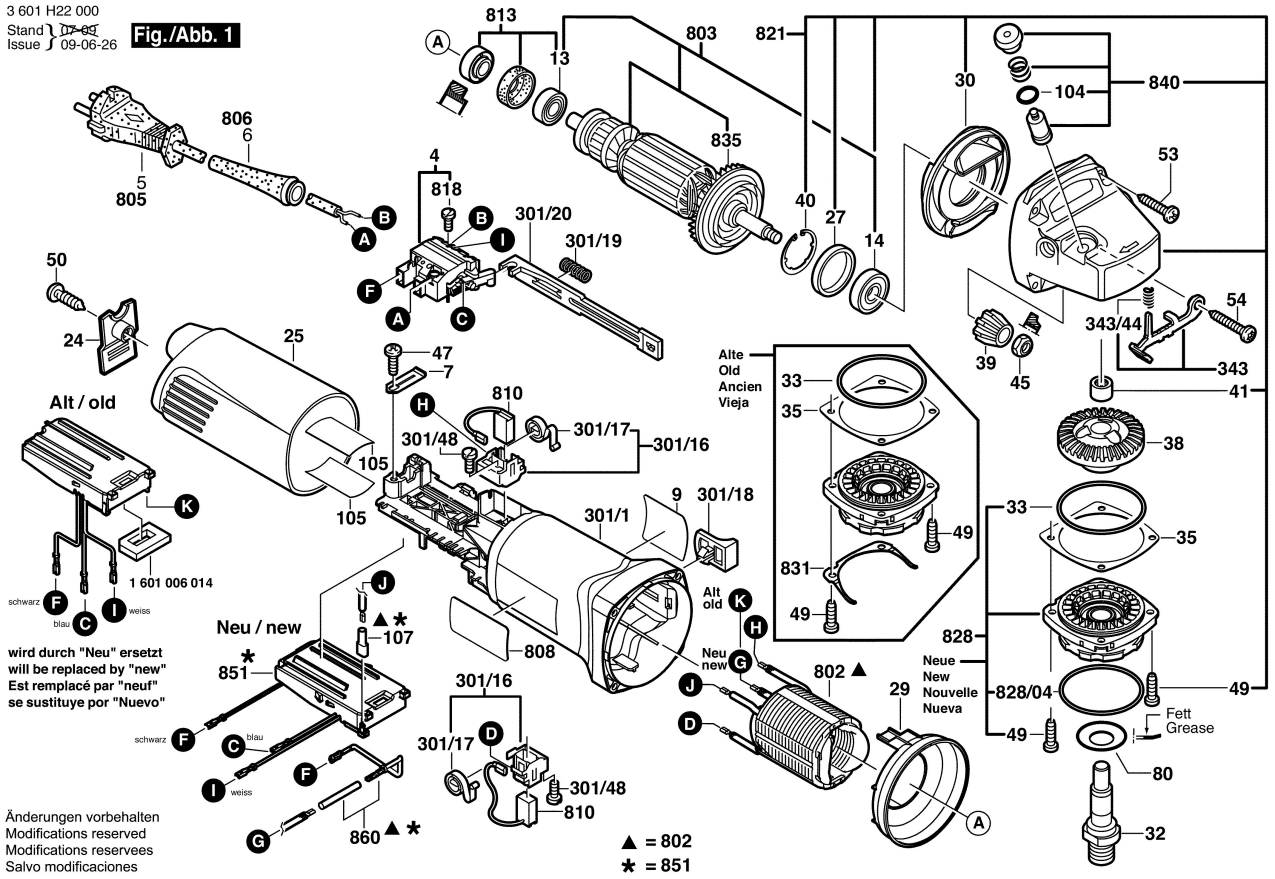

Änderungen vorbehalten
Modifications reserved
Modifications reservees
Salvo modificaciones

3 601 H22 000

Stand } ~~06-06~~
Issue } 07-02-12

Fig./Abb. 2

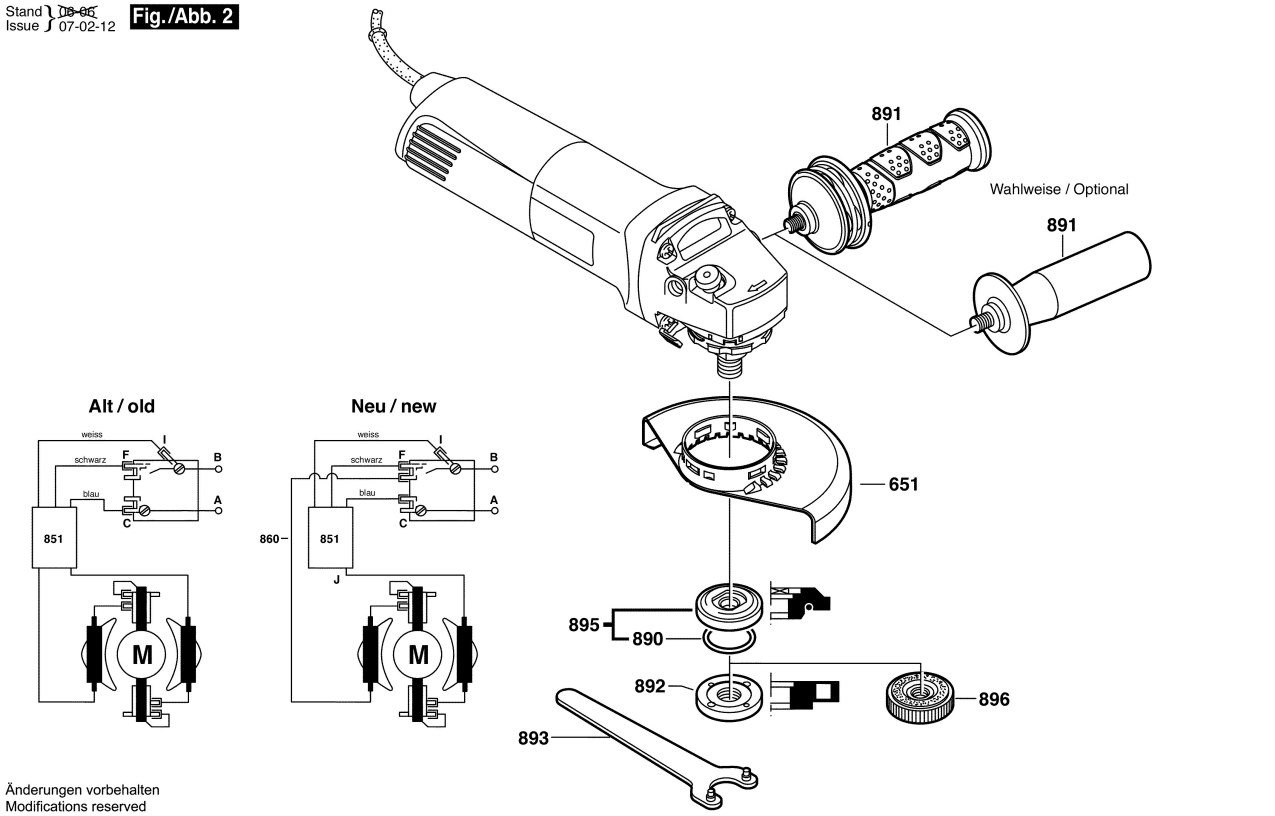

Änderungen vorbehalten
Modifications reserved
Modifications reservees
Salvo modificaciones