3 601 H24 000

Stand } ~~09-06~~
Issue } 12-12-12

Fig./Abb. 1

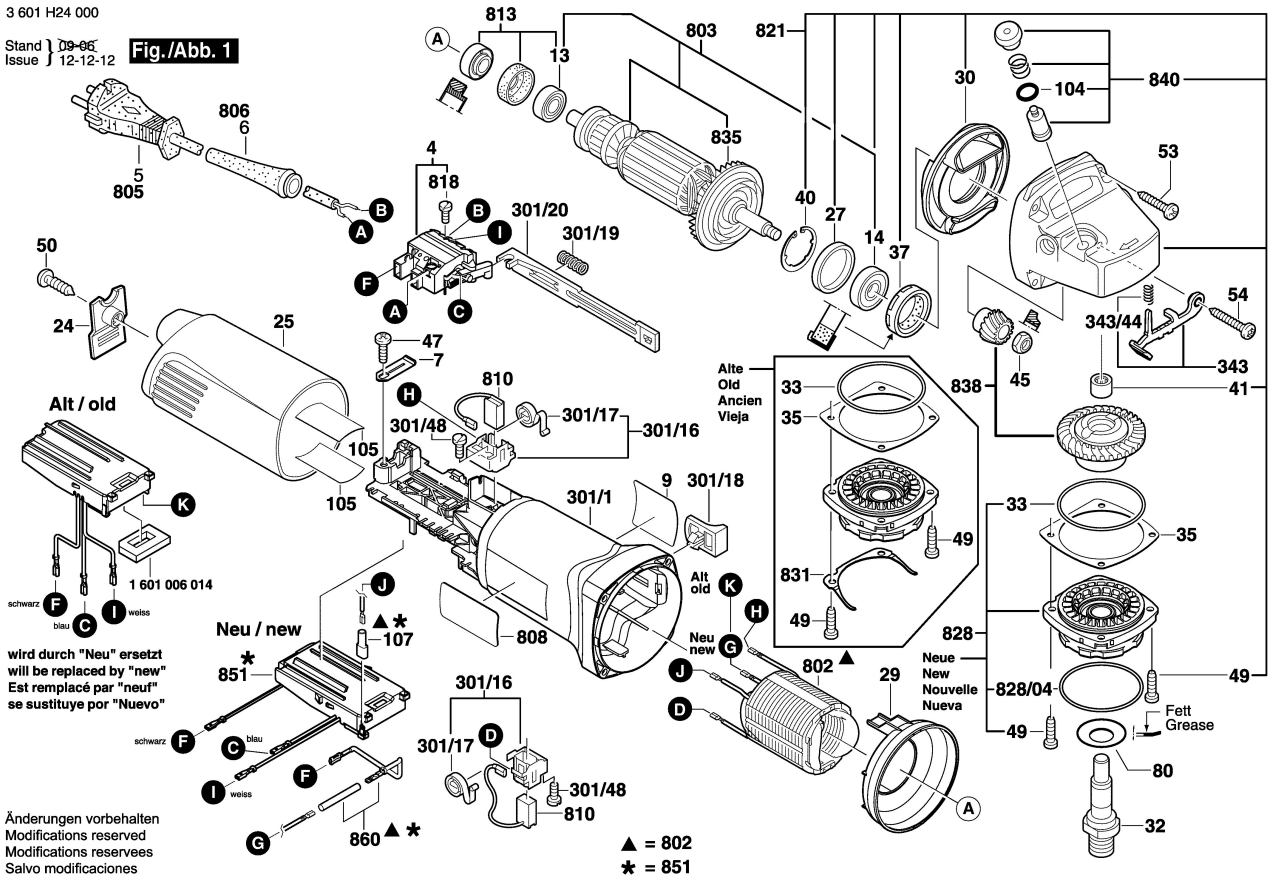

Änderungen vorbehalten
Modifications reserved
Modifications reservees
Salvo modificaciones

3 601 H24 000

Stand } ~~08-06~~
Issue } 07-02-12

Fig./Abb. 2

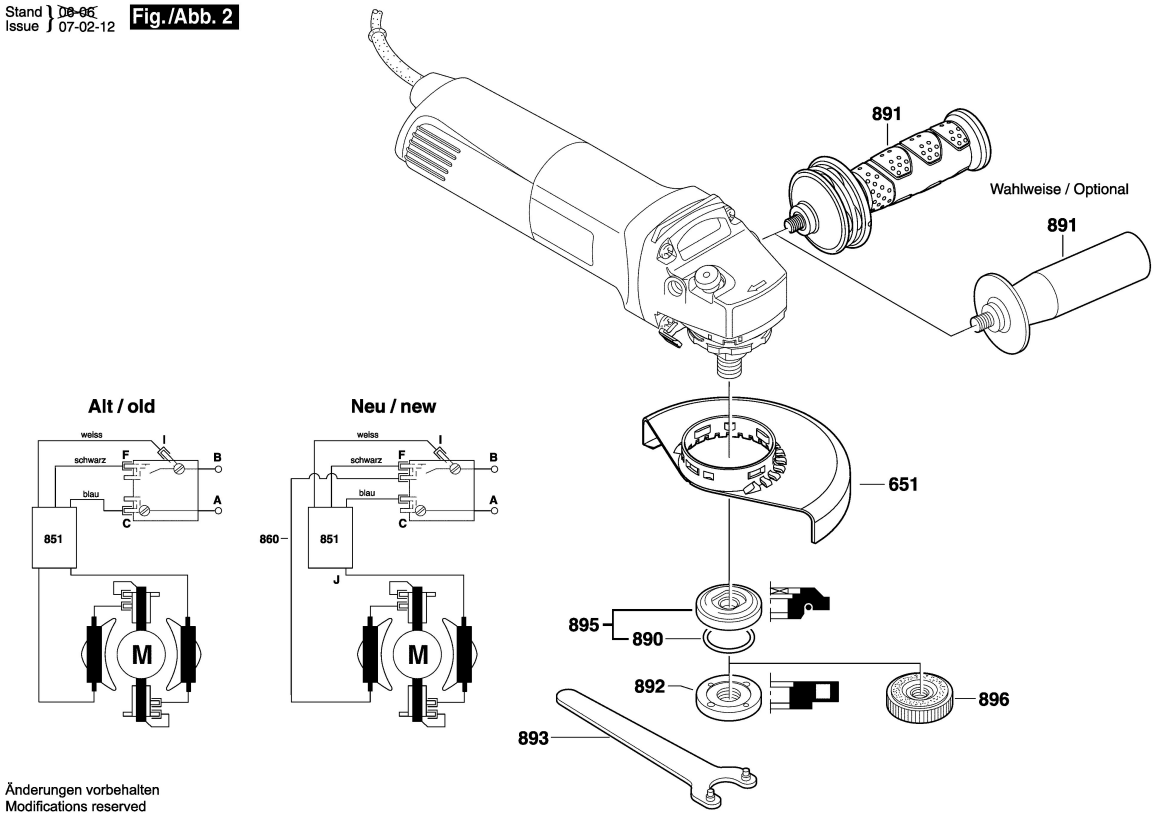

Änderungen vorbehalten
Modifications reserved
Modifications reservees
Salvo modificaciones