3 601 H31 0Z0

Stand } ~~08-07~~
Issue } 09-06-29

Fig./Abb. 1

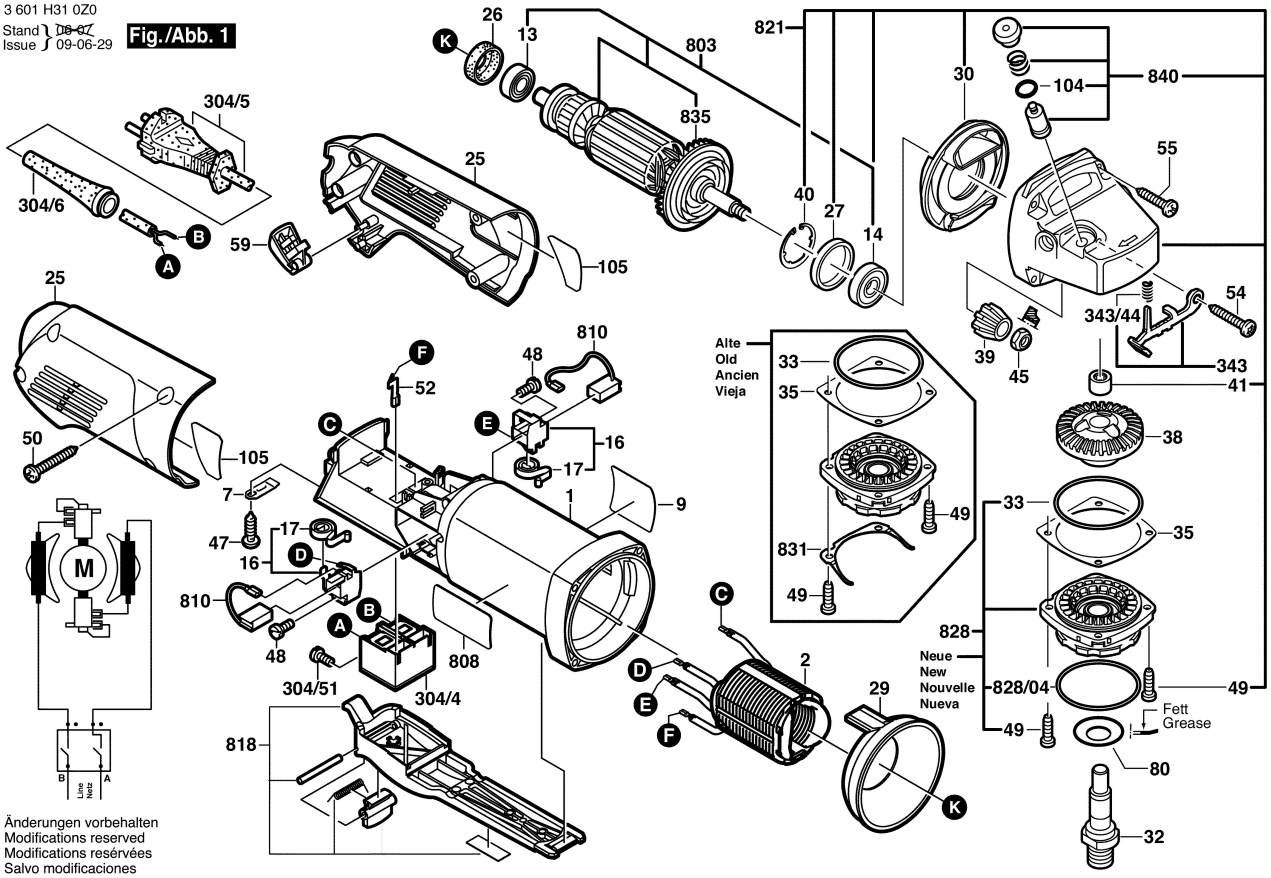

Änderungen vorbehalten
Modifications reserved
Modifications resérvées
Salvo modificaciones

3 601 H31 0Z0

Stand } ~~08-07~~
Issue } 07-03-23

Fig./Abb. 2

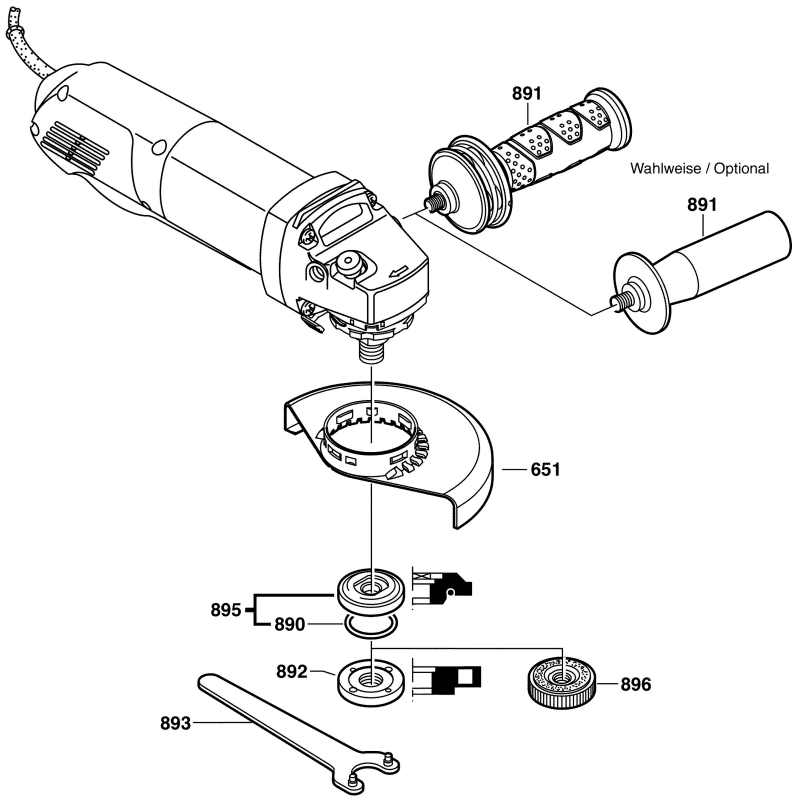

Änderungen vorbehalten
Modifications reserved
Modifications reservees
Salvo modificaciones